MAINTENANCE MANUAL

AQUILA AT01-100A (A211)
AQUILA AT01-100B (A211G)
AQUILA AT01-100C (A211GX)

Doc.-No. MM-AT01-1020-110

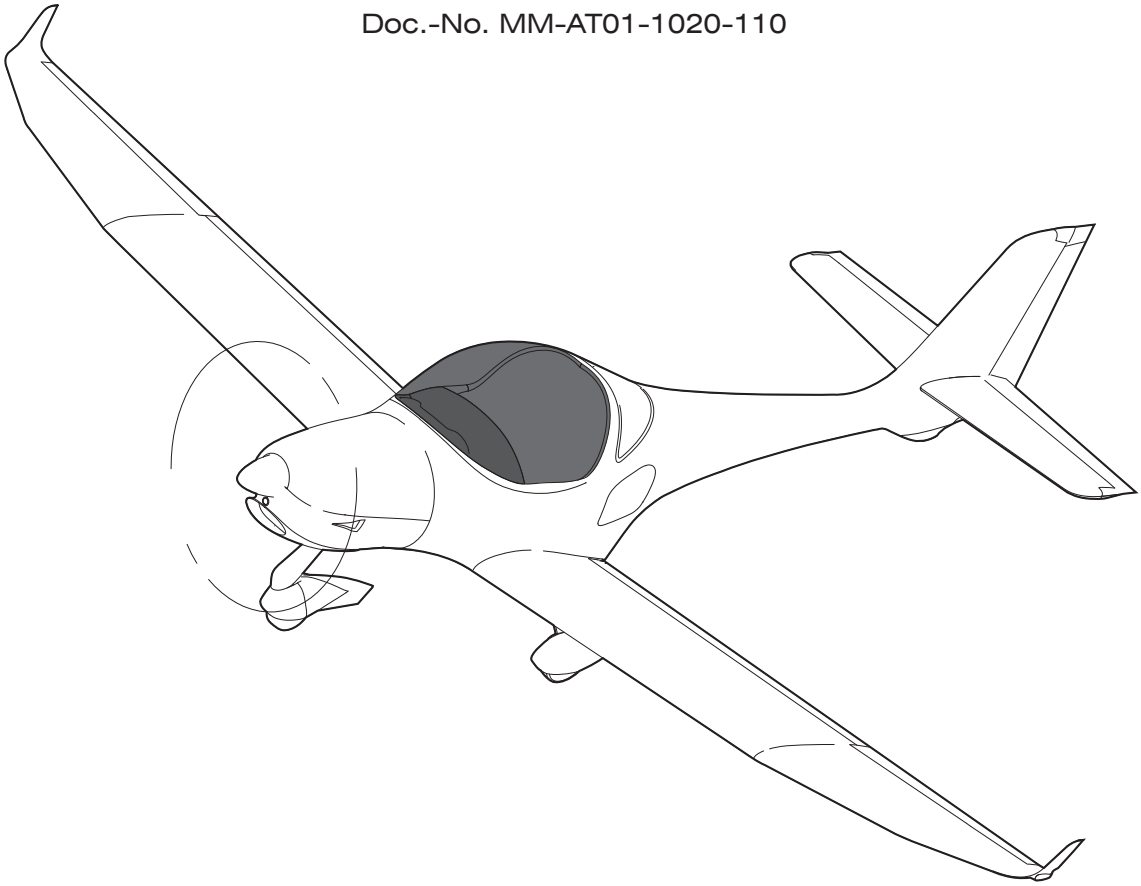

This document is protected by copyright. All associated rights, in particular those of translation, reprinting, reproduction by photo mechanical or similar means and storing in data processing facilities in whole or part are reserved.
The technical content of this document is approved under the authority of DOA ref. EASA.21J.025.

AQUILA Aviation International GmbH
Flugplatz
14959 Schönhagen

Phone: + +49 33 731 707 - 0
Fax: + +49 33 731 707 - 11
e-mail: kontakt@aquila-aviation.de

TABLE OF CONTENTS

Cha/Sec/Sub	Title	Pages
	TABLE OF CONTENTS	1-6
	INTRODUCTION	1-8
	LIST OF EFFECTIVE CHAPTERS	1-2
04	AIRWORTHINESS LIMITATIONS	
04-00-00	Airworthiness Limitations - General	1-2
05	TIME LIMITS / MAINTENANCE CHECKS	
05-00-00	Time Limits / Maintenance Checks - General	1
05-10-00	Component Time Limits	1-3
05-20-00	Scheduled Maintenance Checks	1-27
05-30-00	Daily Inspections	1
05-50-00	Unscheduled Maintenance Checks	1-2
06	DIMENSIONS AND AREAS	
06-00-00	Dimensions and Areas - General	1
06-10-00	Aircraft Dimensions and Areas	1-3
06-20-00	Aircraft Zoning	1-2
06-30-00	Access/Inspection Plates	1-2
07	LIFTING AND SHORING	
07-00-00	Lifting and Shoring - General	1
07-10-00	Jacking	201-202
08	LEVELING AND WEIGHING	
08-00-00	Leveling and Weighing - General	1
08-10-00	Weighing	201-203
08-20-00	Leveling	201-202
09	TOWING AND TAXIING	
09-00-00	Towing and Taxiing - General	1
09-10-00	Towing	201
09-20-00	Taxiing	201
10	PARKING, MOORING, STORAGE AND RETURN TO SERVICE	
10-00-00	Parking, Mooring, Storage and Return to Service - General	1
10-10-00	Parking	201
10-11-00	Storage	201
10-20-00	Mooring	201
10-30-00	Return to Service	201
10-40-00	Transport	201-202

TABLE OF CONTENTS (Cont.)

Cha/Sec/Sub	Title	Pages
11	PLACARDS AND MARKINGS	
11-00-00	Placards and Markings - General	1
11-20-00	Exterior Placards and Markings	201-206
11-30-00	Interior Placards and Markings	201-208
12	SERVICING	
12-00-00	Servicing - General	1
12-10-00	Replenishing - Description	1-2
12-11-00	Fuel - Servicing	301-302
12-12-00	Engine Oil - Servicing	301-302
12-13-00	Induction Air Filter - Servicing	301
12-14-00	Cooling System - Servicing	301-302
12-15-00	Brake System - Servicing	301
12-16-00	Tires - Servicing	301
12-17-00	Battery - Servicing	301
12-20-00	Scheduled Servicing - Description	1
12-21-00	Lubricants - Description	1-2
12-22-00	Lubrication - Servicing	301-303
12-23-00	Aircraft Exterior - Cleaning and Care	701-704
12-24-00	Aircraft Interior - Cleaning and Care	701-702
12-30-00	Unscheduled Servicing	301
20	STANDARD PRACTICES AIRFRAME	
20-00-00	Standard Practices Airframe - General	1
20-10-00	Fastener Identification and Torque Data	1-4
20-11-00	Conversion Data	1-3
21	VENTILATION AND HEATING	
21-00-00	Ventilation and Heating - General	1
21-20-00	Fresh Air Distribution - Maintenance	201-203
21-40-00	Heating - Maintenance	201
23	COMMUNICATIONS	
23-00-00	Communications - General	1
23-10-00	Speech Communications - Description	1-2/2[1)]
23-10-00	Speech Communications - Maintenance	201-202/202[1)]
23-50-00	Audio Integrating - Maintenance	201-202/202[1)]
24	ELECTRICAL POWER	
24-00-00	Electrical Power - General	1
24-00-00	Electrical Power - Troubleshooting	101-102
24-20-00	Alternator System - Description	1-2
24-20-00	Alternator System - Maintenance	201-204
24-30-00	Battery System - Description	1-2

1) Depending on effectivity.

TABLE OF CONTENTS (Cont.)

Cha/Sec/Sub	Title	Pages
24-30-00	Battery System - Maintenance	201-203
24-40-00	External Power - Maintenance	201-203
24-60-00	Electrical Load Distribution - Description	1
24-61-00	Circuit Breaker - Maintenance	201-202
24-97-00	Electrical System Wiring - Maintenance	201
25	EQUIPMENT / FURNISHINGS	
25-00-00	Equipment / Furnishings - General	1
25-10-00	Seats - Maintenance	201-203
25-11-00	Restraint System - Maintenance	201
25-12-00	Cabin Interior - Maintenance	201-203
25-50-00	Cargo Tie Downs - Maintenance	201
25-60-00	Emergency Equipment - Description	1-2
25-62-00	Emergency Locater Transmitter - Maintenance	201-202
25-66-00	Fire Extinguisher - Maintenance	201/202[1)]
27	FLIGHT CONTROLS	
27-00-00	Flight Controls - General	1
27-10-00	Aileron Control System - Description	1-2
27-10-00	Aileron Control System - Maintenance	201-207
27-20-00	Rudder Control System - Description	1-2
27-20-00	Rudder Control System - Maintenance	201-205
27-30-00	Elevator Control System - Description	1-2
27-30-00	Elevator Control System - Maintenance Practices	201-205
27-31-00	Elevator Trim Control System - Description	1-2
27-31-00	Elevator Trim Control System - Maintenance	201-202
27-50-00	Flap Control System - Description	1-2
27-50-00	Flap Control System - Maintenance	201-205
28	FUEL	
28-00-00	Fuel - General	1-2
28-10-00	Fuel Storage - Maintenance	201
28-20-00	Fuel Distribution - Maintenance	201-206
28-41-00	Fuel Quantity Indication - Maintenance	201-203/203[1)]
28-44-00	Fuel Pressure Indication - Maintenance	201
31	INDICATING / RECORDING SYSTEMS	
31-00 00	Indicating / Recording Systems - General	1-2/2/2[1)]
31-10-00	Instrument Panel - Maintenance	201-202
32	LANDING GEAR	
32-00-00	Landing Gear - General	1
32-10-00	Main Landing Gear - Description	1
32-10-00	Main Landing Gear - Maintenance	201-202

1) Depending on effectivity.

TABLE OF CONTENTS (Cont.)

Cha/Sec/Sub	Title	Pages
32-20-00	Nose Landing Gear - Description	1
32-20-00	Nose Landing Gear - Maintenance	201-203
32-40-00	Wheels and Brakes - Description	1/1[1)]
32-40-00	Wheels and Brakes - Maintenance	201-221/208[1)]
33	LIGHTS	
33-00-00	Lights - General	1
33-10-00	Interior Lights - Maintenance	201-202
33-40-00	Exterior Lights - Maintenance	201-202
34	NAVIGATION	
34-00-00	Navigation - General	1
34-11-00	Pitot / Static System - Description	1-2
34-11-00	Pitot / Static System - Maintenance	201-204
34-18-00	Stall Warning System - Description	1
34-18-00	Stall Warning System - Maintenance	201
34-20-00	Attitude and Direction - Maintenance	201-203
34-25-00	Integrated Flight System - Maintenance	201-204/205[1)]
34-40-00	Independent Position Determining - Maintenance	201-201/204[1)]
34-50-00	Dependent Position Determining - Maintenance	201-203
51	STRUCTURES	
51-00-00	Structures - General	1-2
51-10-00	Composite Damage Investigation	201-203
51-20-00	Composite Repair	201-223
52	DOORS	
52-00-00	Doors - General	1
52-10-00	Canopy - Maintenance	201-204
52-30-00	Baggage Door - Maintenance	201
53	FUSELAGE	
53-00-00	Fuselage - General	1
53-10-00	Fuselage Main Frame - Description	1-4
53-10-00	Fuselage Main Frame - Maintenance	201
53-20-00	Auxiliary Structure - Description	1
55	STABILIZERS	
55-00-00	Stabilizers - General	1
55-10-00	Horizontal Stabilizer - Maintenance	201
55-20-00	Elevator - Maintenance	201-203
55-30-00	Vertical Stabilizer - Maintenance	201
55-40-00	Rudder - Maintenance	201-202

1) Depending on effectivity.

TABLE OF CONTENTS (Cont.)

Cha/Sec/Sub	Title	Pages
56	WINDOWS	
56-00-00	Windows - General	1
56-10-00	Flight Compartment Windows - Maintenance	201-203
57	WINGS	
57-00-00	Wings - General	1
57-00-00	Wings - Maintenance	201-206
57-50-00	Control Surfaces - Maintenance	201-207
61	PROPELLER	
61-00-00	Propeller - General	1
61-00-00	Propeller - Troubleshooting	101-103
61-10-00	Propeller Assembly - Maintenance	201-204
61-20-00	Propeller Control - Maintenance	201-204
71	POWER PLANT	
71-00-00	Power Plant - General	1-2
71-00-00	Power Plant - Troubleshooting	101-104
71-00-00	Power Plant - Maintenance	201-203
71-10-00	Cowling - Maintenance	201-202
71-20-00	Engine Mount - Maintenance	201-202
71-60-00	Air Induction System - Maintenance	201
74	IGNITION SYSTEM	
74-00-00	Ignition System - General	1-2
74-00-00	Ignition System - Maintenance	201-203
75	COOLING SYSTEM	
75-00-00	Cooling System - General	1-2
75-00-00	Cooling System - Maintenance	201-202
76	ENGINE CONTROLS	
76-00-00	Engine Controls - General	1
76-00-00	Engine Controls - Maintenance	201-205
77	ENGINE INDICATING	
77-00-00	Engine Indicating - General	1
77-10-00	Power Indication - Maintenance	201/201[1)]
77-20-00	Temperature Indication - Maintenance	201-202/202[1)]
77-40-00	Engine Monitoring System - Maintenance	201-202
78	EXHAUST	
78-00-00	Exhaust System - General	1
78-00-00	Exhaust System - Maintenance	201-202

1) Depending on effectivity.

TABLE OF CONTENTS (Cont.)

Cha/Sec/Sub	Title	Pages
79	OIL	
79-00-00	Oil - General	1-2
79-10-00	Oil Tank - Maintenance	201-202
79-20-00	Oil Cooler - Maintenance	201-202
79-31-00	Oil Pressure Indication - Maintenance	201/201[1)]
79-33-00	Oil Temperature Indication - Maintenance	201/201[1)]
80	STARTING	
80-00-00	Starting - General	1
80-11-00	Starter - Maintenance	201
91	CHARTS AND DIAGRAMS	
91-00-00	Charts and Diagrams - General	1-40

1) Depending on effectivity.

RECORD OF REVISIONS

Revision Number	Date of Revision	Date Inserted	By	Revision Number	Date of Revision	Date Inserted	By
A.01	30.04.13						
A.02	26.08.13						
A.03	24.10.13						
A.04	02.03.15						
A.05	20.08.15						
A.06	29.02.16						
A.07	10.06.16						

RECORD OF TEMPORARY REVISIONS

Temp. Revision Number	Page	Date of Revision	By	Date Removed	By
01	05-10-00 p.1 & 3	11.06.14		20.08.15	
02	05-20-00 p.7 76-00-00 p.203 & 204	14.08.14		20.08.15	

HIGHLIGHTS OF REVISIONS

Revision Number	Date of Revision	Reason for Revision	Revision Number	Date of Revision	Reason for Revision
A.01	30.04.13	Initial issue.			
A.02	26.08.13	SB-AT01-027			
A.03	24.10.13	FAA validation (airworthiness limitations, wire routing diagrams); lubrication revised; standard torque ROTAX engine mount revised			
A.04	02.03.15	Life time limit, 6000 hour inspection			
A.05	20.08.15	Fuel quantity indicating system calibration procedures added; TBO's and maintenance checklist revised; Temporary revisons 1 & 2 incorporated			
A.06	29.02.16	Control surface ply lay-up added; repair procedures revised			
A.07	10.06.16	6000h check & TBOs added; battery check; wing bolts safetying			

LIST OF EFFECTIVE CHAPTERS

Chapter	Title	Date*
GENERAL		
	Table of Contents	10.06.16
	Introduction	30.04.13
04	Airworthiness Limitations	02.03.15
05	Time Limits / Maintenance Checks	10.06.16
06	Dimensions and Areas	30.04.13
07	Lifting & Shoring	30.04.13
08	Leveling and Weighing	30.04.13
09	Towing and Taxiing	30.04.13
10	Parking, Mooring, Storage & Return to Service	30.04.13
11	Placards and Markings	30.04.13
12	Servicing	24.10.13
AIRFRAME SYSTEMS		
20	Standard Practices Airframe	24.10.13
21	Ventilation and Heating	30.04.13
23	Communications	30.04.13
24	Electrical Power	10.06.16
25	Equipment and Furnishings	30.04.13
27	Flight Controls	30.04.13
28	Fuel	20.08.15
31	Indicating/Recording Systems	30.04.13
32	Landing Gear	30.04.13
33	Lights	30.04.13
34	Navigation	30.04.13
STRUCTURES		
51	Structures	29.02.16
52	Doors	30.04.13
53	Fuselage	30.04.13
55	Stabilizers	30.04.13
56	Windows	30.04.13
57	Wings	10.06.16
PROPELLER		
61	Propeller	30.04.13

LIST OF EFFECTIVE CHAPTERS

Chapter	Title	Date*
POWER PLANT		
71	Power Plant	30.04.13
74	Ignition	30.04.13
75	Cooling System	30.04.13
76	Engine Controls	20.08.15
77	Engine Indicating	30.04.13
78	Exhaust	30.04.13
79	Oil	30.04.13
80	Starting	30.04.13
91	Charts and Wiring Diagrams	24.10.13

* The date refers to the issue / revision date of the respective chapter.

The technical content of this document (revision A.07) is approved under the authority of DOA ref. EASA.21J.025.

10.06.2016

Date, Signature Office of Airworthiness

CHAPTER 5

TIME LIMITS / MAINTENANCE CHECKS

TABLE OF CONTENTS

Title	Chapter Section Subject	Page
TIME LIMITS / MAINTENANCE CHECKS - GENERAL	05-00-00	1
Introduction	05-00-00	1
General Description	05-00-00	1
COMPONENT TIME LIMITS	05-10-00	1
General	05-10-00	1
Component Time Limits	05-10-00	1
SCHEDULED MAINTENANCE CHECKS	05-20-00	1
General	05-20-00	1
Inspection Time Intervals Chart	05-20-00	1
6000-Hour Inspection	05-20-00	17
DAILY INSPECTIONS	05-30-00	1
General	05-30-00	1
Pre-Flight Check	05-30-00	1
Post-Flight Check	05-30-00	1
UNSCHEDULED MAINTENANCE CHECKS	05-50-00	1
General	05-50-00	1
Special Checks	05-50-00	1

TIME LIMITS / MAINTENANCE CHECKS - GENERAL

1. Introduction

   A. This chapter provides scheduled and unscheduled maintenance checks and inspections, recommended by the type certificate holder as well as the time limits for service life limited components and parts.

2. General Description

   In the following, a brief description and intended purpose of each section of this chapter is given.

   A. Section 05-00-00 - Time limits / Maintenance Checks - General. This section provides a general overview of the content and purpose of this chapter.

   B. Section 05-10-00 – Component Time Limits. This section contains the time limits of all service life limited components and parts and recommended time between overhaul (TBO) for components.

   C. Section 05-20-00 - Scheduled Maintenance Checks. This section contains information about recommended scheduled maintenance and inspections. The recommended maintenance and inspection program for the systems and components as well as the relevant intervals are embodied in a checklist included in this section.

   D. Section 05-30-00 - Daily Inspections. In this section pre-flight and post-flight checks are described, that have to be carried out every day the aircraft is in operation.

   E. Section 05-50-00 - Unscheduled Maintenance Checks. This section specifies checks, which have to be conducted after unusual events and incidences such as hard landings.

COMPONENT TIME LIMITS

1. General

A. Different components and parts of the aircraft are certified for specific service life. When reaching this time limit, the respective item must be replaced or overhauled.
In order to monitor permissible service life the installation or removal of each item must be recorded in the aircraft logbook.
Where an interval is given in both flight time and calendar time, the limit which is reached first must be applied.

2. Component Time Limits

A. Under certain circumstances the replacement or overhaul of components may be required before the time limits listed below are reached.

B. Replacement or overhaul time limits, recommended by the type certificate holder:

Chapter	Component / Part	Replacement Time	Overhaul
24	Ignition lock	6000h	no
27	Elevator control rods incl. rod ends	6000h	no
27	Rudder control cables	6000h	no
28	Electrical fuel pump	3000h or 10 years	no
32	Nose landing gear spring package rubber elements	5 years	no
32	Main landing gear struts	no	6000h
32	Flexible teflon hoses of the brake system[1)]	2000h or 15 years	no
32	Flexible rubber hoses of the brake system[2)]	10 years	no
55	Lower rudder hinge bracket	6000h	no
57	Wing attachment bolts	6000h	no
71	Flexible teflon hoses of the oil / fuel system[1)]	2000h or 15 years	no

1) Beringer wheel and brake system only.
2) Cleveland / Grove wheel and brake system only.

Chapter	Component / Part	Replacement Time	Overhaul
71	Flexible hoses of the cooling system	5 years	no
71	AQUILA engine mount and attaching bolts	6000h	no
71	Engine shock mounts	with engine overhaul	no

C. Vendor Established Component Time Limits

Chapter	Component / Part	Replacement Time	Overhaul
25	ELT battery	Note 1	no
25	Fire extinguisher Air Total	10 years	Note 4
25	Fire extinguisher H3R	12 years	no
31	ASPEN internal battery	800h or 3 years	no
32	Wheel assembly[2)]	no	10.000h or 20 years Note 4
32	Brake assembly[2)]	no	10.000h or 20 years Note 4
32	Wheel bearings and bearing retaining rings[2)]	10 years	no Notes 6, 8
32	Wheel O-ring seals[2)]	5 years each tire change	no
32	Brake caliper seals, pistons and assembly screws[2)]	5 years / Note 6	no
32	Brake pads[2)]	5 years / Note 7	no
32	Brake discs[2)]	10 years / Note 6	no
34	WINTER instruments	no	Note 5
61	Propeller MTV-21-A/170-05	no	2000 h or 6 years Note 2

1) Hoses that are not covered by the engine type certificate (TC).
2) Beringer wheel and brake system only.

61	Propeller governor P-850-12	no	2000 h or 6 years Note 2
71	Engine ROTAX 912S	no	2000 h or 15 years Note 3
71	ROTAX mechanical fuel pump	5 years / Note 3	no
71	ROTAX flexible teflon hoses of the fuel system	with engine overhaul Note 3	no
71	ROTAX rubber parts of the engine (V-belt, hoses, carburetor parts)	5 years / Note 3	no
71	Spark plugs	200h / Note 3	no

NOTES:

Note 1: Refer to manufacturer instructions for battery replacement time limits.

Note 2: Refer to latest issue of the mt-propeller Service Bulletin No. 1.-( ), and to the mt-Propeller E-124 Operation and Installation Manual.

Note 3: Refer to the latest issues of BRP-Rotax, i.e. Service Bulletins, Service Information and to the ROTAX Aircraft Engines Maintenance Manual for ROTAX Engine Type 912 Series.

Note 4: Refer to manufacturer instruction for overhauling.

Note 5: Though there is no TBO for these instruments, the manufacturer Gebr. Winter GmbH & Co. KG recommends that airspeed indicators and altimeters are subjected to retesting after 5 years.

Note 6: Parts must be changed by pair on both left and right sides at the same time.

Note 7: Brake pads must be changed all four at the same time even if not worn out.
When new brake discs are installed brake pads must be changed to new ones even if not worn out.

Note 8: Immediate replacement if corroded or damaged.

SCHEDULED MAINTENANCE CHECKS

1. General

A. The inspection time intervals chart contained in this chapter shows the recommended intervals at which maintenance and maintenance checks should be carried out on the aircraft.

Annual inspections and 100 hour inspections on the AQUILA AT01-100 must include all inspection items as required by FAR 43, Appendix D, "Scope and detail of annual/100h inspections". Chapter 4 "Airworthiness Limitations" of this manual defines the inspection intervals for continued airworthiness.

B. If an aircraft is being operated under unusual environmental conditions, maintenance intervals may be reduced.

2. Inspection Time Intervals Chart

A. The maintenance and checks listed are to be carried out at the specified intervals and documented appropriately.

NOTE: For new aircraft and new engines the first check is carried out after 25 hours and should be of the extent of a 100-hour inspection. For new engines only an engine ground run and the checks listed in the "Engine" section have to be carried out.

NOTE: If more than 30% of operation hours have been flown with leaded fuel (e.g. AVGAS 100LL), an additional 50-hour inspection is necessary (refer to ROTAX Aircraft Engines SI-912-016).

NOTE: Where an interval is given in both flight time and calendar time, the limit which is reached first must be applied. The next interval starts with the flight time and calendar time of the latest performed maintenance check.

B. For intervals between maintenance work, the following tolerances must not be exceeded:

Interval	Tolerance
up to and including 100 h	10% of interval
>100 h up to and including 1000 h	5% of interval
>1000 h	50 h
calendar time limits	30 days

These tolerances must not be added up. For example: if the 100-hour inspection was done at 107 h, the next inspection must be done at 200±10 h, not 207±10 h.

If an inspection is carried out earlier than allowed by the specified tolerance, all subsequent inspection intervals are counted from that inspection. For example: If the 100 h inspection was done at 87 h, the next inspection must be done at 187±10 h.

C. Due to recent ROTAX publications the maintenance checks given for the ROTAX engine may not be up to date. Refer to the latest revisions of ROTAX Engine Type 912 Series Maintenance Manual and Service Bulletins.

D. Due to the multiplicity of equipment coming onto the market, no maintenance instructions are given for electronic equipment. For information on a certain component use the documentation provided by the manufacturer of this component.

NOTES:

R912*	Maintenance Manual for ROTAX Engine Type 912 Series
MT*	mt-Propeller E-124 Operation and Installation Manual
TTSN	Total Time Since New
TTSO	Total Time Since Overhaul

E. Inspection Time Intervals Chart:

Aircraft S/N		Operating Hours		Registration Number	
Engine S/N		Operating Hours TTSN / TTSO:		Date	
Propeller S/N		Operating Hours TTSN / TTSO:		Type of Inspection	

No.	Pre-Inspection / Engine Ground Test	Reference	Interval 100h	other	Initials
1.	Check that the following documents are up-to-date and available upon request: - AT01-100 Maintenance Manual - AT01-100 Airplane Flight Manual - Aircraft Log Book and required certificates - Engine and Propeller Log Books - Equipment List and Weight and Balance Record - Airworthiness Directives - Service Bulletins and Service Information - Services Time Record	AT01-100 Maintenance Manual, AT01-100 Airplane Flight Manual	X		
2.	Airworthiness Directives - Verify all Airworthiness Directives have been complied with.		X		
3.	Service Letters, Service Bulletins, and Service Information - Verify all AQUILA GmbH and suppliers Service Letters, Service Bulletins and Service Information have been complied with.		X		
4.	Service time records, equipment list and weight and balance records - Check. Update if necessary.		X		
5.	Aircraft file and technical documentation - Verify complete and in proper order.		X		

No.	Pre-Inspection / Engine Ground Test (Cont.)	Reference	Interval 100h	Interval other	Initials
6.	Engine and engine compartment - Clean for leakage check.	R912* 12-20-00 1)	X[1)]		
7.	Perform an engine test run as follows: Start engine and warm-up at 820 RPM for approx. 2 minutes, continue at 1030 RPM, duration depends on ambient temperature until oil temperature reaches 50° C. Rudder pedal brakes and parking brake - Check for proper operation. Propeller governor - Set 1700 RPM and monitor the manifold pressure. Reduce engine speed by moving the propeller control by 200 RPM. Note the RPM drop and manifold pressure. Increase RPM to 1700 RPM. Repeat three times. RPM drop: _____RPM / Man. press :_____in. Hg Engine instruments - Check engine parameters. Magneto RPM drop - Set 1700 RPM. Check that RPM drop is less than 120 RPM while operating on one magneto and no more than a 50 RPM drop difference between left and right magnetos. RPM drop left magneto :_____RPM RPM drop right magneto:_____RPM Carburetor heat - Pull carburetor heat knob at 1700 RPM. Engine RPM should show a drop of at least 20 RPM. RPM drop:_____RPM Engine full power - Advance throttle to full forward. Tachometer should read 2360 ±25 RPM. Full power RPM:_____RPM Engine idle - Move throttle control lever to full aft. Tachometer should read 750 +50 RPM. Idle RPM:_____RPM Cool down engine at 1100 RPM. Shut down engine, set the ignition switch and the master switch to the OFF position. Remove ignition key from aircraft.	R912* 12-20-00 8) 32-40-00 MT*	X[1)]		
8.	Airframe, power plant, propeller - Do a walk around to detect damages, fluid leaks or other abnormalities.		X[1)]		
9.	Fuselage and empennage - Clean.		X		
10.	Aircraft interior - Clean and vacuum.		X		
11.	Record all malfunctions and abnormalities.		X		

1) Check has to be carried out every 100 hours of operation or 12 month, whichever comes first.

No.	Engine	Reference	Interval 100h	Interval other	Initials
1.	Engine cowling - Remove engine cowling. Check for cracks, overheated areas, deformation, loose or missing fasteners. Check condition of fire protect paint and heat resistance shielding.		X		
2.	Engine oil change - Remove oil drain screw from oil tank. Drain old oil and dispose in accordance with environmental regulations.	12-12-00 R912* 12-20-00 11)	X[2)]	50h[1)]	
3.	Oil tank - Check oil tank and clean if contaminated.	R912* 12-20-00 11)	X[1)]	200h	
4.	Oil filter - Remove old oil filter from engine and install new oil filter. Lubricate mating sealing ring of new oil filter with engine oil. Tighten new oil filter by hand. Cut open old oil filter without producing any metal chips and inspect filter mat for particles. Findings:_____	12-12-00 R912* 12-20-00 11)	X[2)]	50h[1)]	
5.	Oil change - Renew gasket ring of drain screw on oil tank. Tighten drain screw to 25 Nm (221 in.lbs). Refill oil tank with approx. 3 liters of oil. For oil quality, see Operators Manual and SI-912-016. Refilled:_____Quantity:_____L CAUTION: DO NOT USE AIRCRAFT ENGINE OIL. Due to the friction clutch and the high stresses in the reduction gear 4-stroke motor cycle oils are recommended. For suitable lubricants and oil change intervals, see ROTAX Operators Manual and latest appropriate ROTAX publications.	12-12-00 R912* 12-10-00 4) R912* 12-20-00 11) SI-912-010 SB-912-040	X[2)]	50h[1)]	
6.	Visual inspection of the magnetic plug for accumulation of chips	R912* 12-20-00 12)	X[2)]	50h[1)]	
7.	Check compression by differential pressure method. Test pressure: 6 bar (appr. 6000 hPa / 87 psi) Pressure drop: max. 25% Cyl. 1 2 3 4 Pressure drop: _____ _____ _____ _____	R912* 12-20-00 5)		200 h	
8.	Cooling air ducts, engine baffling and cylinder cooling fins - Check for obstructions, cracks, wear and general condition. Check for signs of abnormal temperatures. Check crankcase for cracks.	R912* 12-20-00 3) SB-912-029	X[2)]		
9.	Leakage bore at the base of the water pump - Check for signs of leakage.	R912* 12-20-00 4)	X[2)]		

1) If more than 30% of operation hours have been flown with leaded fuel e.g.: AVGAS 100LL
2) Check has to be carried out every 100 hours of operation or 12 month, whichever comes first.

No.	Engine (Cont.)	Reference	Interval 100h	other	Initials
10.	Cooling system - Renew coolant. Flush the cooling system.	12-14-00 R912* 12-20-00 9)		2 years	
11.	Coolant hoses and lines - Check for damage, leakage, hardening due to heat, porosity, loose connections and secure attachments. Check routing for kinks and narrow bends.	75-00-00 R912* 12-20-00 9)	X[1)]		
12.	Coolant expansion tank - Check for damage and abnormalities. Inspect rubber protection plate on tank base for secure fit. Check coolant level, replenish as necessary. Check gasket of radiator cover, inspect pressure control valve, and return valve. The pressure control valve opens at 1,2 bar (18 psi). Check coolant with densimeter or glycol tester.	75-00-00 R912* 12-10-00 3) R912* 12-20-00 9) SB-912-043	X[1)]		
13.	Overflow bottle - Inspect for damage and abnormalities. Verify coolant level, replenish as necessary. Inspect venting bore in cap of overflow bottle for clear passage. Check line from exp. tank to overflow bottle for damage, leakage and clear passage.	75-00-00 R912* 12-10-00 3) R912* 12-20-00 9)	X[1)]		
14.	Oil and coolant radiator - Check for obstructions, leaks and security of attachment. If necessary, clean cooling fins and do a pressure leakage test.	75-00-00 79-20-00	X[1)]		
15.	Oil lines - Inspect for damage, leakage, hardening due to heat, porosity, security of connections and attachments. Check routing for kinks or narrow bends. Check fire protection shielding.	R912* 12-20-00 4)	X[1)]		
16.	Oil tank vent line - Check for proper routing, for obstructions and clear passage		X[1)]		
17.	Fuel lines - Check for damage, leakage, hardening due to heat, porosity, secure connections and attachments. Check routing for kinks or narrow bends. Check metal fuel lines for cracks and scuffing marks.	R912* 12-20-00 4)	X[1)]		
18.	Fuel selector / shut-off valve - Check for security of attachment. Check that the valve engages noticeable into the positions LEFT, RIGHT and OFF.		X[1)]		
19.	Filter element of electrical fuel pump - Inspect and clean.	28-20-00	X[1)]		
20.	Battery - Clean. Check charge. Measure residual capacity [2)]. Residual capacity must be at least 19Ah [2)]. If necessary, charge/replace battery.	12-17-00 24-30-00	X[1)]		
21.	Battery tray, terminals and cables - Check for security, corrosion and general condition. Grease battery terminals.	12-22-00	X[1)]		
22.	Starter - Check security of attachment and electrical connections.		X[1)]		

1) Check has to be carried out every 100 hours of operation or 12 month, whichever comes first.
2) N/VFR equipped aircraft only.

No.	Engine (Cont.)	Reference	Interval 100h	Interval other	Initials
23.	Alternator - Check attachment and V-belt tension. Inspect electrical connections.	R912* 12-20-00 6)	X[2)]		
24.	Spark plugs - Remove all spark plugs, check the heat range designation, clean, check electrode gap and adjust if necessary. Replace as required.	R912* 12-20-00 13)	X[2)]		
25.	Spark plug connectors - Check that resistance spark plug connectors fit tightly on the spark plugs. Minimum pull-off force is 30 N (7 lb).			200h	
26.	Spark plugs - Replace spark plugs	R912* 12-20-00 13)	X [1)]	200h	
27.	Oil temperature / oil pressure sensor - Check for tight fit and condition.		X[2)]		
28.	Exhaust system - Check attachment screws and springs for security and fit. Inspect system for damage and missing parts. Visual inspection of the muffler, exaust pipes and mounting flanges for cracks, corrosion and leakage. Check heat shielding for condition.		X[2)]		
29.	Cabin heat - Check heat shroud and heat ducts for damage and security of attachment. Check heat control function.		X[2)]		
30.	Exhaust muffler - Remove heat shroud from muffler and inspect muffler for condition, corrosion and leakage. WARNING: FAILURE TO INSPECT MUFFLER FOR LEAKS COULD RESULT IN CARBON MONOXIDE ENTERING THE CABIN, LEADING TO SERIOUS INJURY OR DEATH!	78-10-00		200h	
31.	Propeller gear box - Check the friction torque in free rotation. Actual friction torque is measured: _____Nm	R912* 12-20-00 14)	X[2)]		
32.	Propeller gear box - Inspect overload clutch.	R912* 05-50-00 2) SB-912-033		600h[1)]	
33.	Propeller gear box - Check the propeller gearbox (with overload clutch).	R912* 12-20-00 14)		1000h	
34.	Carburetors - Check carburetor synchronization. Mechanical and pneumatic synchronization.	R912* 12-20-00 10)	X[2)]		
35.	Carburetors - Inspect the float chamber assy for contamination and corrosion.	R912* 12-20-00 10) SI-912-021		200h	
36.	Carburetors - Check the ventilation of the float chambers. Any trouble with float chamber ventilation impairs engine and carburetor function and must therefore be avoided. Check that the passage of the ventilation lines is free and that no kinks can arise.			200h	

1) If more than 30% of operation hours have been flown with leaded fuel e.g.: AVGAS 100LL
2) Check has to be carried out every 100 hours of operation or 12 month, whichever comes first.

No.	Engine (Cont.)	Reference	Interval 100h	Interval other	Initials
37.	Carburetors - Removal/assembly of the two carburetors for carburetor inspection.	Rotax Heavy MM 73-00-00 3.1)		200h	
38.	Carburetors - Check the free movement of the carburetor actuation (throttle lever and starting carburetor). Check that the Bowden cable allows full travel of the throttle lever from stop to stop. Check Bowden cables for bulging with control lever in the full throttle position. Adjust throttle control if necessary. Lubricate carburetor throttle shaft.	R912* 12-20-00 10) 76-00-00 12-22-00	X[2)]		
39.	Carburetor sockets and drip tray - Inspect the carburetor for damage and abnormalities, check for cracks, wear and good condition. Take note of any changes caused by temperature.	Rotax Heavy MM 73-00-00 3.4.3) SB-912-030		200h	
40.	Airbox assy - Check for damage, security of attachment and condition. Inspect connected air hoses for condition and leakage. Check that the flaps can be moved through their full arc of travel for hot and filtered ram air.		X[2)]		
41.	Air filter - Inspect and clean. Renew if necessary. Clean air filter casing. Check the drain hole at the bottom of casing for obstructions or blockage.	R912* 12-20-00 2)	X[2)]		
42.	Other external engine accessories - Inspect screws and nuts of all other external engine parts and accessories for tight fit. Inspect safety wiring if applicable, replace as necessary.		X[2)]		
43.	Engine mounts (manufactured by ROTAX and AQUILA) - Check mounts for deformation, cracks, corrosion, security and damage from heat. Check mounting bolts for condition and correct torque value. At engine (4 bolts M10): 40 Nm (354 in.lbs) At shock mounts (4 bolts M10): 25 Nm (221 in.lbs) At firewall (4 bolts M10): 30 Nm (266 in.lbs) Inspect shock mounts for deterioration.	R912* 12-20-00 3) SB-912-028 SB-AT01-022	X[2)]		
44.	Engine test run - Attach cowling and perform an engine test run as described above. After engine test run, re-tighten oil filter by hand and examine engine and engine compartment for signs of leakage. Compare results with first engine test run. Check oil level, replenish as necessary.	17-10-00 05-20-00 R912* 12-10-00 8)	X[2)]	50h[1)]	

1) If more than 30% of operation hours have been flown with leaded fuel e.g.: AVGAS 100LL.
2) Check has to be carried out every 100 hours of operation or 12 month, whichever comes first.

No.	Propeller	Reference	Interval 100h	Interval other	Initials
1.	Spinner - Remove from aircraft and check for delamination and cracks.	61-10-00	X		
2.	Spinner plate - Check for cracks and fit.		X		
3.	Blade root and hub area - Examine for oil and grease leaks.		X		
4.	Propeller blades - Check blade play (up to 3 mm [1/8 in.] allowed).		X		
5.	Propeller blades - Check blade angle play. (max. 2°)		X		
6.	Hub - Inspect outside condition of the hub and parts for cracks, corrosion and deterioration.		X		
7.	Check nuts for low pitch - Inspect for tightness and safety wire.		X		
8.	Propeller assy - Check safetying.		X		
9.	Propeller flange stop nuts - Check correct torque value (45 - 47 Nm [398 - 416 in.lbs]).		X		
10.	Propeller blades - Visual inspection for damage, repair if necessary. Attach spinner.	MT* 6.2) - 6.10)	X		
11.	Propeller governor - Visually inspect for signs of oil leakage. Check bolts and nuts are tightened properly and safety wired. Check governor actuation for free movement and bulging.	61-20-00	X		

No.	Fuselage / Cabin	Reference	Interval 100h	Interval other	Initials
1.	Prepare aircraft for visual checks: Remove cabin carpets and floorboards; Remove glare shield; Remove baggage compartment floorboard; Remove access panel of the baggage compartment bulkhead; Remove access panel 210AB.	06-30-00	X		
2.	Fuselage shell - Visual inspection for paint coat damage, dents, cracks, holes, distortion and other evidence of failure. All unpainted parts for delamination (white spots).		X		
3.	Lower fin - Inspect fin and lower rudder for signs of breakage. Check skid plate for wear.		X		
4.	Canopy - Examine the acrylic glass for cracking, crazing and general condition. Inspect tubular canopy hinge frame and brackets for cracks, distortion, corrosion, wear, and security of attachment. Check the gas spring strut for sufficient power and evidence of leakage.		X		

No.	Fuselage / Cabin (Cont.)	Reference	Interval 100h	Interval other	Initials
5.	Canopy locking - Check the canopy locking mechanism operates correctly. Check wear of parts. Check existence of the locking pin. The pin has to protrude the cover by approx. 2 mm. Cases of lacking locking pins have to be reported to the type certificate holder (contact information: see cover sheet). Check function of the locking pin. The canopy locking mechanism must not be too smooth-running. In the locked position of the latch, a smooth running release of the latch due to in-flight vibrations must not be possible. If necessary, readjust locking pin.	52-10-00	X		
6.	Lubricate canopy lock assembly.	12-22-00		annual	
7.	Baggage door - Check door seal, door latching mechanism, and door hinge for defects and condition. Lubricate if needed. Inspect door structure for cracks or other damage.	12-22-00	X		
8.	ELT - Perform ELT inspection. Check ELT mount and Velcro strap for security of attachment. Replace strap if necessary.	25-62-00		annual	
9.	Seat belts/harnesses for pilot / co-pilot - Check components for completeness of the label, deformation, cracks, fractures, functioning of moveable parts, corrosion, surface finish condition and security of attachment. Check textile components for damaged stitching, injurious marks, broken fabric threads, chafe marks and fusing. Perform functional check of buckle and inertia reel.		X		
10.	Seats - Check security of attachment of the seat assy to aircraft structure. Check operation of seat adjustment mechanism and seat stops. Inspect gas spring struts for oil leakage or other damage.		X		
11.	Seats - Check ease of movement - if required remove seats, clean and lubricate seat rails.	25-10-00		annual	
12.	Center Console - Visually examine the parts of the engine controls, lines and cables, located in the center console.			annual	
13.	Main landing gear - Inspect fuselage structure at such points and areas where the main landing gear is attached. Check for stress marks, distortion, disbonding, and delamination. Inspect main landing gear strut brackets for distortion, cracks, corrosion, and security of attachment. Check wear and condition of the polyamide inserts. Check bolts for correct torque.		X		
14.	Parking brake valve - Check for evidence of leakage especially at the brake line connections. Check control assy for damage.		X		
15.	Flap actuator - Check for wear and damage, for secure mechanical connections and loose or missing lock devices. Check electrical wiring for wear, damage, and proper routing. Inspect electrical connections and switches for security, corrosion and poor condition. Check function of the limit switches and position indicator.		X		

No.	Fuselage / Cabin (Cont.)	Reference	Interval 100h	other	Initials
16.	Elevator trim system - Check the actuator and the springs for security, wear and damage. Check safetying. Check electrical wiring for wear, insulation damage, and proper routing. Inspect electrical connections and switches for security, corrosion and poor condition. Perform system test and check the correct function of the position indicator.		X		
17.	Aileron and elevator control - Check the control sticks, the brackets and the control rods for distortion, cracks, chafing, corrosion and security. Examine all bearings for condition and secure fit. Check safetying. Check travel of control surfaces if the control stick is in the full forward /neutral/ aft, and full left /neutral/ right positions. Verify no binding or jumpy movement of the control sticks through their full range of travel.		X		
18.	Rudder control - Check rudder control weldment and rudder bellcrank for cracks, distortion, chafing and security. Examine rudder control support brackets, rudder pedal pivot brackets and connection of the rudder controls with the nose gear steering tubes for security, condition and correct splintering. Check centering of springs and cables. Inspect control cables, control cable guides, cable connections, turnbuckles and hardware for correct installation, corrosion, wear, safetying and proper operation.		X		
19.	Rudder / aileron control interconnection - Check condition and correct function.		X		
20.	Rudder pedal bearing and Beringer brake master cylinder rod ends - Lubricate.	12-22-00		annual	
21.	Brake master cylinders and brake lines in the cabin area - Check for security, condition and signs of leakage.		X		
22.	Brake reservoir - Check for leakage and system for trapped air. Inspect the vent valve in the filler cap of the brake reservoir for obstruction and blockage. Make sure the hydraulic brake fluid level is correct and replenish, if necessary. Only use hydraulic brake fluid of the required grade.		X		
23.	Hydraulic brake fluid - Renew.	12-15-00		2 years	
24.	Fuel lines - Check for leakage and security.		X		
25.	Wing main bolts - Inspect for proper fit, condition and correct safetying.	57-10-00	X		
26.	Wing main bolts - Remove for visual inspection and lubrication. Lube type used: _____	57-10-00 12-22-00		500h[1)] 5years[1)] or annual[1)]	
27.	Engine and propeller controls - Check for proper function, security of attachment and for evidence of wear.		X		

1) Interval depends on lube type. Refer to 12-22-00.

No.	Fuselage / Cabin (Cont.)	Reference	Interval 100h	Interval other	Initials
28.	Exterior / interior placards and markings - Check presence, legibility, and security.	11-20-00 11-30-00	X		
29.	Fire extinguisher - Check for physical damage, corrosion, leakage or clogged nozzle. Weigh unit to determine fullness. Check for obstructions to access or visibility, safety seal is not broken or missing, HMIS label in place, instructions are legible.			annual	

No.	Wings, Ailerons, Flaps	Reference	Interval 100h	Interval other	Initials
1.	Wings with winglets, ailerons, and flaps - Visual inspection for paint coat damage, dents, cracks, holes, distortion and other evidence of failure. Examine all unpainted parts for delamination (white spots).		X		
2.	Wing spars in the fuselage belly - Remove spar covering and perform visual inspection of the spar web, the bonding between the spar web and the carbon fiber spar cap strip, as well as the attachment of the root ribs to the spars. Check security and function of control system brackets attached to the spars.			annual	
3.	Drain and vent holes - Check for blockage and suspect appearance of any liquid.		X		
4.	Ailerons - Check aileron hinges, bearings, and hinge brackets for security and excessive play. Check hinge bushings and replace if necessary. Check bolts and nuts for proper safetying. Examine aileron pushrod for correct installation with stop nuts. Check actuation assembly for suspect binding, excessive play.		X		
5.	Aileron hinges - Check play. Maximum play approx.: - Axial ± 1,00 mm (± 0.04 in.) - Radial ± 0,30 mm (± 0.01 in.)		X		
6.	Aileron control system - Measure the play in the aileron control system with the control surface locked. Apply a lateral force of 30 N (6.7 lb) to the control stick - the maximum play allowed on the top of the stick is 10 mm (0.4 in.) for both sides. The play should be measured for both control sticks. If excessive play is detected, investigate cause.		X		
7.	Flaps - Check hinge brackets for damaged paint, cracks and delamination. Check bearings for correct fit and excessive play. Check hinge bushings and replace if necessary. Check correct safetying of all hinge bolts and castle nuts with cotter pins.		X		
8.	Flap hinges - Check play. Maximum play approx.: - Axial ± 0,30 mm (± 0.01 in.) - Radial ± 0,30 mm (± 0.01 in.) Measure the play in the flap control system at the flap trailing edge, at the inboard flap end. Max. play allowed with flaps in take-off and landing positions: ± 5 mm (0.2 in.). No play with flaps retracted.		X		

No.	Wings, Ailerons, Flaps (Cont.)	Reference	Interval 100h	Interval other	Initials
9.	Flaps and ailerons - Check that the gap between fuselage and flaps, between flaps and ailerons, and at the outboard end of the ailerons is at least 2 mm (0.08 in.).		X		
10.	Stall warning system - Check for condition and proper operation.		X		
11.	Navigation / strobe lights - Check operation, condition of glass, and security of attachments.	33-40-00	X		
12.	Inner fuel tank ribs - Check connection of fuel and vent lines to the fuel tank and the flange gasket of the fuel level sensors for signs of leakage.	28-10-00 28-20-00 28-40-00		annual	
13.	Fuel vent lines - Check for blockage.		X		
14.	Fuel tank drain valves - Check for correct function and leakage.		X		
15.	Fuel filler caps - Check for proper function and leakage.		X		
16.	Tank inlet and upper wing shell in the fuel tank area - Check sealing of the bore hole in the tank inlet. Check wing skin for bubble formation or bulging.	SB-AT01-027		annual[1)]	
17.	Tie-down points - Check thread and structure around the tie-down attach points for any damage.	10-20-00	X		

No.	Empennage, Elevator, Rudder	Reference	Interval 100h	Interval other	Initials
1.	Empennage - Inspect complete surface of the vertical and horizontal stabilizers, the elevator and the rudder for dents, cracks, holes and delamination.		X		
2.	Rudder hinge, elevator hinge and bellcranks - Check brackets and bellcranks for security of attachment and corrosion. Examine bearings for binding and excessive play. Check hinge bushings and replace if necessary. Check correct safetying of the lower rudder pivot pin with castellated nut and cotter pin.		X		
3.	Hinge play and control surface positioning - Verify clearance between horizontal stabilizer and elevator horns and clearance between vertical stabilizer and rudder horn is at least 1 mm (0.04 in.). Check elevator hinge and rudder hinge play. Maximum play approx.: - Axial ± 0,30 mm (± 0.01 in.) - Radial ± 0,30 mm (± 0.01 in.)			annual	
4.	Elevator control system - Measure the play in the elevator control system with the control surface locked. Apply a force of 50 N (11.2 lb) forwards and then backwards to the control stick - the maximum play allowed on the top of the stick is 10 mm (0.4 in.) for both sides.			annual	

1) AT01-100A/B/C-300 up to AT01-100A/B/C-312 only. Refer to SB-AT01-027, latest revision.

No.	Empennage, Elevator, Rudder (Cont.)	Reference	Interval 100h	Interval other	Initials
5.	Rudder - Remove rudder if there is noticeable play. Examine the elevator actuation assembly inside the vertical stabilizer. Check for any damage, for correct installation and function and for security and wear. Inspect rudder hinge brackets, rudder yoke and control cable thimble-eyes for security, conditions and wear. Lubricate control cable thimble-eyes as required.	55-40-00		annual	
6.	Rudder rigging - Set rudder pedals in neutral position. Verify the rudder and the nose landing gear are also in neutral position. Set rudder pedals to fully left and then to full right. The rudder must hit the rudder travel stops and the distance from rudder pedal to firewall must be sufficient to apply the pedal brake. Adjust position of the rudder pedals by varying the length of nose wheel steering tubes. Adjust rudder neutral position and control cable tension by means of the turnbuckles in the cabin area.	27-20-00	X		

No.	Nose and Main Landing Gear	Reference	Interval 100h	Interval other	Initials
1.	Wheel fairings - Check condition and correct fit. Remove and clean. Check for paint coat damage, cracks, dents and delamination.		X		
2.	Fairing mounts - Inspect for cracks, distortion or other damage.		X		
3.	Nose gear strut mount and wheel fork - Check for deformation, cracks and corrosion. Check nose gear strut journal bearing for proper operation, play and correct safetying.		X		
4.	Nose gear strut and elastomer package - Check strut for deformation, stress marks, and cracks. Inspect correct installation of the nose wheel fork. Inspect elastomer package for wear, deterioration, cracks, correct fit and security. Check journal bearings of the elastomer package for play and condition.		X		
5.	Nose wheel steering - Inspect nose wheel steering tubes for condition, excessive play and correct safetying. Check return springs at nose gear strut for security and verify they are tension-free, when the nose wheel is in neutral position.		X		
6.	Main landing gear - Check main gear struts for deformation, cracks, damage to the paint coat, and corrosion. Inspect wheel axles for security of attachment to struts and for any damage.		X		
7.	Wheels and rims - Clean. Check tires for wear, cuts, foreign matter and deterioration. Inspect rims for security, deformation, cracks and other damage. Examine wheel bearings for excessive play, corrosion and irregular operation. Check tire pressure and proper location of the red slide marks.		X		

No.	Nose and Main Landing Gear (Cont.)	Reference	Interval 100h	Interval other	Initials
8.	Wheels - Disassemble, remove bearings. Remove screws and clips if they are out of tolerance. Clean all metal parts. Visually inspect wheel flanges and central spacer for cracks, nicks, corrosion or other damage.	32-40-00		6000h[1)] 10years[1)]	
9.	Wheel bearings - Clean and lubricate.	12-22-00		500h[2)] annual[2)]	
10.	Wheel brakes - Clean. Apply brakes, examine system for leaks. Inspect brake fluid carrying lines at the main landing gear for condition, leakage and security of attachment. Inspect brake discs for cracks, corrosion and wear. Replace brake discs if worn below: Beringer: 3.8mm (0.15 in.) Cleveland / Grove: 4.3mm (0.17 in.) Inspect brake pads for condition and wear. Replace linings when worn to: Beringer: 1mm (0.04 in.) Cleveland / Grove: 2.6mm (0.10 in.) Check freedom of movement of the pistons and pressure plates.	32-40-00	X		
11.	Wheel brakes - Check pistons retraction. Check brake caliper assembly bolt torque. Check play between brake disc and wheel clips. Change clips if play is above 0.4mm (0.016 in.)	32-40-00		annual[1)]	
12.	Wheel brakes - Remove caliper assembly from axle, disconnect from brake hose. Disassemble brake caliper. Clean all metal parts. Visually inspect caliper casing and back plate for cracks, nicks, corrosion or other damage.	32-40-00		3000h[1)] 5 years[1)]	
13.	Wheel axles - Clean. Visually inspect for cracks, nicks, corrosion or other damage.			every wheel removal	

No.	Electrical System / Avionics	Reference	Interval 100h	Interval other	Initials
1.	Electrical wiring system - Check the complete electrical wiring system for security, damage, wear and secure fit. Check all cable connections for tight fit, good contact, corrosion and condition.	R912* 12-20-00 13)	X[3)]		
2.	Tank inlet bonding wires - Check bonding between electric ground (exhaust port) and tank inlet (max. 1Ω).			annual	
3.	Instruments - Check instrument panel mounting brackets for security and condition. Examine instruments for security of attachment. Check electrical cables, hoses and lines for correct installation, condition and proper routing.			annual	
4.	Pitot / static system - Check pitot tube for security of attachment, condition and obstructions. Check pitot and static pressure lines for correct installation, condition, water and proper routing. Check water traps for water.	34-11-00	X		

1) Beringer wheel and brake system only.
2) Cleveland / Grove wheel and brake system only.
3) Check has to be carried out every 100 hours of operation or 12 month, whichever comes first.

No.	Electrical System / Avionics (Cont.)	Reference	Interval 100h	Interval other	Initials
5.	Pitot heating system - Carefully check pitot tube for heating up with pitot heating switched ON. WARNING: RISK OF SKIN BURNS! DO NOT TOUCH PITOT TUBE WHEN HEATING IS SWITCHED ON!		X[1)]		
6.	Engine monitoring system - Check transducers and lines for leakage, loose fittings and proper installation. Check fittings for corrosion. Check electrical wires for chafing, breakage and loose connections. Check system for proper operation.		X[1) 3)]		
7.	Garmin G500 system - Check all components and wiring for damage, corrosion, proper operation and security of attachment.	34-25-00	X[3)]		
8.	Garmin G500 system - Check bonding.	34-25-00		2000h[1)] 10years[1)]	
9.	Aspen EFD1000 system - Check all components and wiring for damage, corrosion, proper operation and security of attachment. Perform bonding check.	34-25-00		annual[1)]	
10.	Tank inlet bonding wires - Check bonding wires at the airframe ground tube for yellow discoloration.	SB-AT01-027		annual[2)]	

No.	Return to Service	Reference	Interval 100h	Interval other	Initials
1.	Install wheel fairings. Install seats (if removed). Install cabin floor boards. Install baggage compartment floorboard. Install access panel of the baggage compartment bulkhead. Install access panel 210AB.	06-30-00	X		
2.	Flight controls - Check for full range of travel and excessive friction.		X		
3.	Flaps - Operate through full extension and retraction for steady and complete deployment. Check correct limit switches operation at CRUISE, T/O and LDG flap positions. Verify the corresponding flap switch position and the corresponding flap position indicator reading.		X		
4.	Elevator trim - Check for full range of travel and excessive friction. Inspect proper operation of the trim control switch, limit switches, and the trim position indicator. Verify that elevator control forces decrease or increase when operating elevator trim.		X		
5.	Engine and propeller controls - Check full range of motion without any obstruction or excessive friction to travel. Check throttle and propeller control levers friction lock.		X		
6.	Foreign items - Remove any foreign items from the aircraft.		X		

1) If installed.
2) AT01-100A/B/C-300 up to AT01-100A/B/C-312 only. Refer to SB-AT01-027, latest revision.
3) Check has to be carried out every 100 hours of operation or 12 month, whichever comes first.

The aircraft is airworthy and meets the condition specified in the aircraft data sheet. All maintenance required by Service Information and Airworthiness Directives and all prescribed scheduled maintenance checks have been carried out.

Service Station:

Next inspection when _____ hours of operation have been reached.

Place, Date

Name, Signature of Mechanic

Name, Signature of Inspector

Stamp

3. 6000-Hour Inspection

A. The airframe of the type AQUILA AT01 is limited to 6.000 hours of flight time (refer to 04-00-00). An inspection program to reach an extension of replacement time can be obtained from the type certificate holder on request.
For all S/N`s having performed the 6000-hour inspection and possible maintenance actions resulting thereof no further life time limit beyond 6000 operating hours will be established and the composite structure is then considered to have "Safe Life".

B. All inspection items listed in the following table ”6000-Hour Inspection Checklist” must be performed within **every 6000 hours of flight time**. The inspection **must be performed in conjunction with a 100-hour inspection including all annual inspection items** listed for the airframe (refer to “Inspection Time Intervals Chart” above).
All items performed, all findings discovered and their follow up corrections have to be recorded in acc. with an approved quality procedures manual.

NOTE: The first 6000-hour inspection is replaced by an inspection program to reach an extension of life time (refer to 04-00-00). It can be obtained from the type certificate holder on request.

C. The inspection table shows three different types of inspections listed in the column “Method/Inspection”:

V	Visual inspection
T	Tap test
F	Functional / fit check

Refer to 51-10-00 for a description of visual inspection and tap test methods.

D. Prior to inspection all aircraft log-books have to be checked to establish the aircraft data set and the repair history of the aircraft.

Before starting the 6000-hour inspection the following actions are required:
(1) Fix the fuselage on jacks (refer to 07-10-00).
(2) Remove wing (refer to 57-00-00).
(3) Remove rudder (refer to 55-40-00).
(4) Remove elevator (refer to 55-20-00).
(5) Remove ailerons (refer to 57-50-00).
(6) Remove flaps (refer to 57-50-00).
(7) Remove cowling (refer to 71-10-00).

E. 6000-Hour Inspection Checklist

Aircraft S/N		Operating Hours TTSN		Registration Number	
Engine S/N		Operating Hours TTSN / TTSO		Date	
Propeller S/N		Operating Hours TTSN / TTSO		Date	

No.	Inspection Items Left Wing	Inspection Method	Finding / Condition	Initials
Root Ribs (in front of and behind wing spar)				
1.	Bonding area of ribs to the wing shell - delamination, cracks.	V, T		
2.	Condition of rib laminate, delamination, cracks.	V, T		
3.	Bonding area at the main wing spar web.	V		
4.	Wing attachment bolt bushing - bonding in the rib.	V		
5.	Condition of bushing, wear of bearing area, corrosion.	V		
Inner Flap Hinge Support Rib				
6.	Bonding area of rib to the wing shell - delamination, cracks.	V, T		
7.	Condition of rib laminate, delamination, cracks.	V, T		
8.	Bonding area at the main wing spar web.	V		
9.	Areas around bushing - delamination, cracks.	V		
10.	Condition of ball bearing, wear, corrosion.	V		
Wing Main Spar				
11.	Spar cap between root ribs - bonding to shear web, cracks.	V		
12.	Shear web between root ribs - condition, cracks, delamination.	V		
13.	Spar cap - inspection through openings in root rib and inspection opening in lower wing shell. Bonding to the wing shell (cracks), condition of the main shear web (delamination).	V		
Upper and Lower Wing Shell				
14.	Wing shell - delamination, cracks, scratches in shell surfaces, chipping of paint, UV damage.	V, T		
15.	Wing shell - core damage and dents in sandwich, disbond of shell laminate from core material.	V, T		

No.	Inspection Items Left Wing (Cont.)	Inspection Method	Finding / Condition	Initials
16.	Areas around inspection openings - delamination, cracks.	V		
17.	Wing leading edge bonding area - disbonds, cracks.	V, T		
18.	Area around pitot-static tube opening - delamination, cracks.	V, T		
19.	Area around tie-down fixation point - delamination, cracks.	V, T		
20.	Area around NAV-light opening - delamination, cracks.	V		
21.	Area around winglet root upper wing shell - cracks.	V, T		
22.	Area around ring insert of the tank filler - cracks, disbonding.	V, T		
Trailing Edge Shear Web				
23.	Wing trailing edge, flap area - bonding lower to upper shell, disbond, cracks.	V, T		
24.	Wing trailing edge, flap area - laminate condition, cracks.	V		
25.	Wing trailing edge, aileron area - bonding area shear web to wing shell, disbonds, cracks.	V, T		
26.	Wing trailing edge, aileron area - laminate condition, cracks.	V		
27.	Bonding left an right of hinge levers for flap and aileron.	V, T		
28.	Aileron hinge levers - delamination at bolt area, bolt corrosion.	V		
29.	Flap hinge levers - delamination at bolt area, bolt corrosion.	V		
Tank Rib				
30.	Bonding area of rib to the wing shell - delamination, cracks.	V, T		
31.	Condition of rib laminate, delamination, cracks.	V, T		
32.	Bonding area at the main wing spar web.	V		

No.	Inspection Items Right Wing	Inspection Method	Finding / Condition	Initials
Root Ribs (in front of and behind wing spar)				
1.	Bonding area of ribs to the wing shell - delamination, cracks.	V, T		
2.	Condition of rib laminate, delamination, cracks.	V, T		
3.	Bonding area at the main wing spar web.	V		
4.	Wing attachment bolt bushing - bonding in the rib.	V		
5.	Condition of bushing, wear of bearing area, corrosion.	V		

No.	Inspection Items Right Wing (Cont.)	Inspection Method	Finding / Condition	Initials
Inner Flap Hinge Support Rib				
6.	Bonding area of rib to the wing shell - delamination, cracks.	V, T		
7.	Condition of rib laminate, delamination, cracks.	V, T		
8.	Bonding area at the main wing spar web.	V		
9.	Areas around bushing - delamination, cracks.	V		
10.	Condition of ball bearing, wear, corrosion.	V		
Wing Main Spar				
11.	Spar cap between root ribs - bonding to shear web, cracks.	V		
12.	Shear web between root ribs - condition, cracks, delamination.	V		
13.	Spar cap - inspection through openings in root rib and inspection opening in lower wing shell. Bonding to the wing shell (cracks), condition of the main shear web (delamination).	V		
Upper and Lower Wing Shell				
14.	Wing shell - delamination, cracks, scratches in shell surfaces, chipping of paint, UV damage.	V, T		
15.	Wing shell - core damage and dents in sandwich, disbond of shell laminate from core material.	V, T		
16.	Areas around inspection openings - delamination, cracks.	V		
17.	Wing leading edge bonding area - disbonds, cracks.	V, T		
18.	Area around tie-down fixation point - delamination, cracks.	V, T		
19.	Area around NAV-light opening - delamination, cracks.	V		
20.	Area around winglet root upper wing shell - cracks.	V, T		
21.	Area around ring insert of the tank filler - cracks, disbonding.	V, T		
Trailing Edge Shear Web				
22.	Wing trailing edge, flap area - bonding lower to upper shell, disbond, cracks.	V, T		
23.	Wing trailing edge, flap area - laminate condition, cracks.	V		
24.	Wing trailing edge, aileron area - bonding area shear web to wing shell, disbonds, cracks.	V, T		
25.	Wing trailing edge, aileron area - laminate condition, cracks.	V		
26.	Bonding left an right of hinge levers for flap and aileron.	V, T		
27.	Aileron hinge levers - delamination at bolt area, bolt corrosion.	V		

No.	Inspection Items Right Wing (Cont.)	Inspection Method	Finding / Condition	Initials
28.	Flap hinge levers - delamination at bolt area, bolt corrosion.	V		
Tank Rib				
29.	Bonding area of rib to the wing shell - delamination, cracks.	V, T		
30.	Condition of rib laminate - delamination, cracks.	V, T		
31.	Bonding area at the main wing spar web.	V		

No.	Inspection Items Control Surfaces	Inspection Method	Finding / Condition	Initials
Ailerons				
1.	Aileron surfaces - Check for delamination of shells, scratches.	V, T		
2.	Paint surfaces - Check for condition, scratches, UV damage, chipping of paint.	V		
3.	Damage of core, dents to core, disbond between core and skin.	V, T		
4.	Aileron trailing and leading edges - bonding delamination.	V, T		
5.	Inner and outer aileron ribs - bonding delamination with skin.	V, T		
6.	Check condition of drain holes in inner and outer ribs.	V		
7.	Areas around hinges and aileron control horn fasteners - delamination from skin, cracks.	V		
8.	Condition of control horn bearing, corrosion, play.	V		
9.	Condition of hinges (bushings), corrosion, play.	V		
10.	Inspect for previously performed repairs and repaintings. If so, check aileron mass and static moment to be within specified limits (refer to 57-50-00).	V		
Flaps				
11.	Flap surfaces - Check for delamination of shells, scratches.	V, T		
12.	Paint surfaces - Check for condition, scratches, UV damage, chipping of paint.	V		
13.	Damage of core, dents to core, disbond between core and skin.	V, T		
14.	Flap trailing and leading edges - bonding delamination.	V, T		
15.	Inner and outer flap ribs - bonding delamination with skin.	V, T		
16.	Check condition of drain holes in inner and outer ribs.	V		

No.	Inspection Items Control Surfaces (Cont.)	Inspection Method	Finding / Condition	Initials
17.	Areas around hinge fasteners - delamination from skin, cracks.	V		
18.	Condition of control horn bearing, corrosion, play.	V		
19.	Condition of hinges (bushings), corrosion, play.	V		
20.	Inspect for previously performed repairs and repaintings. If so, check flap mass and static moment to be within specified limits (refer to 57-50-00).	V		
Rudder				
21.	Rudder surfaces - Check for delamination of shells, scratches.	V, T		
22.	Paint surfaces - Check for condition, scratches, UV damage, chipping of paint.	V		
23.	Damage of core, dents to core, disbond between core and skin.	V, T		
24.	Rudder trailing and leading edges - bonding delamination.	V, T		
25.	Lower rudder hinge rib - bonding delamination with skin.	V, T		
26.	Check condition of drain hole in lower hinge rib.	V		
27.	Area around upper hinge - delamination from skin, cracks.	V		
28.	Mass balance horn - Check for cracks and delamination.	V, T		
29.	Condition of hinge (bushing), corrosion, play.	V		
30.	Inspect for previously performed repairs and repaintings. If so, check rudder mass and static moment to be within specified limits (refer to 55-40-00).	V		
31.	Bolts at lower hinge - Check for condition, cracks, corrosion, thread.	V		
Elevator				
32.	Elevator surfaces - Check for delamination of shells, scratches.	V, T		
33.	Paint surfaces - Check for condition, scratches, UV damage, chipping of paint.	V		
34.	Damage of core, dents in core, disbond between core and skin.	V, T		
35.	Elevator trailing and leading edges - bonding delamination.	V, T		
36.	Inner elevator ribs - bonding delamination with skin.	V, T		
37.	Check condition of drain holes in inner ribs.	V		
38.	Areas around hinges - delamination from skin, cracks.	V		
39.	Mass balance horn - Check for cracks and delamination.	V, T		

No.	Inspection Items Control Surfaces (Cont.)	Inspection Method	Finding / Condition	Initials
40.	Condition of hinges (bushings), corrosion, play.	V		
41.	Inspect for previously performed repairs and repaintings. If so, check elevator mass and static moment to be within specified limits (refer to 55-20-00).	V		
42.	Bolts at inner hinge - Check for condition, cracks, corrosion, thread.	V		

No.	Inspection Items Horizontal Stabilizer	Inspection Method	Finding / Condition	Initials
1.	Stabilizer surfaces - Check for delamination of shells, scratches.	V, T		
2.	Paint surfaces - Check for condition, scratches, UV damage, chipping of paint.	V		
3.	Damage of core, dents in core, disbond between core and skin.	V, T		
4.	Stabilizer leading edges - Check for bonding delamination.	V, T		
5.	Trailing edge spar - Check for cracks and bonding delamination with skin.	V, T		
6.	Areas around hinge supports in trailing edge spar - Check for cracks and delamination.	V		
7.	Condition of hinges (bushings), corrosion, play.	V		

No.	Inspection Items Fuselage	Inspection Method	Finding / Condition	Initials
Fuselage Skin Structure and Vertical Stabilizer Skin				
1.	Skin surfaces - Check for delamination of shells, scratches.	V, T		
2.	Paint surfaces - Check for condition, scratches, UV damage, chipping of paint.	V		
3.	Damage of core, dents in core, disbond between core and skin.	V, T		
4.	Areas near bonding seam at centerline on upper and lower fuselage surfaces - Inspect for cracks in paint.	V, T		
5.	Check condition of drain holes in lower fuselage.	V		
6.	Inspect for previously performed repairs and repaintings.	V		
7.	Areas near bonding seam at connection between horizontal and vertical stabilizer on upper and lower horizontal surfaces - Inspect for cracks in paint.	V		

No.	Inspection Items Fuselage (Cont.)	Inspection Method	Finding / Condition	Initials
Fuselage / Wing Interconnection				
8.	Root ribs and intersection to fuselage - Check for cracks in paint and structure.	V		
9.	Area around wing attachment bolt bushings - Check for cracks and disbonding.	V		
10.	Wing attachment bolt bushings - Check for wear, scratches, corrosion and tightness of fit with the bolt.	V		
11.	Seat bulkhead and forward landing gear bulkhead in spar bridge - Check condition of laminate and bonding areas with the fuselage shell.	V, T		
12.	Forward landing gear bulkhead - Check laminate around fasteners of landing gear supports for cracks and delamination.	V, T		
Bulkheads, Ribs and Hinges in Vertical Stabilizer				
13.	Upper and lower shear web in vertical stabilizer - Check for delamination and cracks.	V		
14.	Upper and lower shear web in vertical stabilizer - Check bonding to the stabilizer shell.	V, T		
15.	Upper hinge plate - check for delamination and cracks.	V		
16.	Bushing in upper hinge plate - wear, corrosion, fit/play.	V		
17.	Lower shear web around fasteners for lower hinge bracket - Check laminate.	V		
18.	Bushing in lower hinge bracket - wear, corrosion, fit/play.	V		
19.	Lower end of the stabilizer (bumper) - delamination, cracks.	V		
20.	Bumper plate at lower end of the stabilizer - Check fixation and condition.	V		
Firewall				
21.	Check firewall bulkhead (from cockpit side) for cracks in the laminate (around cut outs).	V		
22.	Firewall bulkhead - Check bonding to the fuselage skin.	V, T		
23.	Areas around engine brackets - delamination, cracks.	V, T		
24.	Firewall metal shield - condition, wear, corrosion.	V		
25.	Fire resistant firewall sealer around the fire shield - condition, corrosion.	V		
26.	Areas around Camloc fasteners at fuselage cowling support - Check laminate for cracks and delamination.	V		

No.	Inspection Items Fuselage (Cont.)	Inspection Method	Finding / Condition	Initials
27.	Area around pedal control brackets - delamination, cracks.	V		
Cockpit Area and Baggage Compartment				
28.	Front cockpit floor - Check for delamination and cracks. Check bonding area to the fuselage structure for disbonding.	V, T		
29.	Front shear bulkhead - Check for delamination and cracks. Check bonding area to the fuselage structure for disbonding.	V, T		
30.	Front seat bulkhead - Check for delamination and cracks. Check bonding area to the fuselage structure for disbonding.	V, T		
31.	Seat elements and attachments - delamination, cracks.	V, T		
32.	Rear seat bulkhead - Check for delamination and cracks. Check bonding area to the fuselage structure for disbonding.	V, T		
33.	Front landing gear bulkhead - Check for delamination and cracks. Check bonding area to the fuselage structure for disbonding.	V, T		
34.	Rear landing gear bulkhead - Check for delamination and cracks. Check bonding area to the fuselage structure for disbonding.	V, T		
35.	Baggage bulkhead - Check for delamination and cracks. Check bonding area to the fuselage structure for disbonding.	V, T		
36.	Lower lap belt attachments - Check for delamination and cracks. Check bonding area to the fuselage structure for disbonding.	V		
37.	Lower lap belt fitting - Check for wear and corrosion.	V		
38.	Upper lap belt attachments - Check for delamination and cracks at the baggage bulkhead.	V, T		
39.	Baggage compartment floor supports - Check for delamination and cracks. Check bonding area to the fuselage structure for disbonding.	V		
40.	Gas spring supports - Check for delamination and cracks. Check bonding area to the fuselage structure for disbonding.	V		
41.	Composite tube stiffener and attachments - Check for delamination and cracks. Check bonding area to the fuselage structure for disbonding.	V		
42.	Baggage compartment door, doorframe and supports - Check for delamination and cracks. Check bonding area to the fuselage structure for disbonding.	V		
43.	Tailboom bulkheads - Check for delamination and cracks. Check bonding area to the fuselage structure for disbonding.	V		

No.	Inspection Items Fuselage (Cont.)	Inspection Method	Finding / Condition	Initials
44.	Elevator control lever mounting supports on baggage bulkhead - Check for delamination and cracks. Check bonding area to the fuselage structure for disbonding.	V		
45.	Flap actuator mounting supports in middle tunnel - Check for delamination and cracks. Check bonding area to the fuselage structure for disbonding.	V		
46.	Canopy frame (at the fuselage) - Check for delamination and cracks.	V, T		
47.	Step supports - Check for delamination and cracks. Check bonding area to the fuselage structure for disbonding.	V		
48.	Check step component for wear and corrosion.	V		
Canopy				
49.	Canopy frame - Check for delamination and cracks. Check bonding area of Plexiglas to the canopy frame structure for disbonding.	V		
50.	Canopy latching components - corrosion, wear, damage.	V		
51.	Canopy pin and bushing components - Check for corrosion, wear and fit/play.	V		
52.	Canopy Plexiglas including side windows - cracks, damage.	V		

No.	Inspection Items Landing Gear	Inspection Method	Finding / Condition	Initials
Main Landing Gear				
1.	Main landing gear struts - Check condition (distortion, corrosion, wear and paint damages).	V		
2.	Remove main wheels from axles and check axles for distortion, corrosion, wear and damages.	V		
3.	Check inner and outer main brackets for fit of shims, cracks and wear.	V		
Nose Landing Gear and Engine Mount				
4.	Nose landing gear main strut and wheel fork - Check condition (cracks, distortion, corrosion, wear and paint damages).	V		
5.	Nose wheel steering tubes - Check condition (cracks and distortion).	V		
6.	Engine mount - Check the entire tube frame and all welded joints, in particular at the firewall and nose gear suspension, for distortion, wear and cracks.	V		

No.	Inspection Items Landing Gear (Cont.)	Inspection Method	Finding / Condition	Initials
7.	Engine mount attachment bolts - Check for cracks and wear.	V		
8.	Nose wheel axle - Check for cracks and distortion.	V		

The aircraft is airworthy and meets the condition specified in the aircraft data sheet.
All prescribed 6000-hour inspection items and maintenance actions resulting thereof have been carried out.

Service Station:

Place, Date

Name, Signature of Mechanic | Name, Signature of Inspector | Stamp

DAILY INSPECTIONS

1. General

   A. Pre-flight and post-flight checks must be carried out daily when the aircraft is in operation.

2. Pre-Flight Check

   A. This check must be carried out before the first flight of the day. In this way, the general condition of the aircraft and its engine can be ascertained. Pre-flight checks are essential for flight safety as numerous accidents can be traced back to inadequate pre-flight checks.

      The scope of the pre-flight check is listed in the AQUILA AT01-100, section 4.

3. Post-Flight Check

   A. This check should be carried out after the final flight of the day. For the most part, it is a visual inspection.

   B. The check should contain all points of the pre-flight check.
      (1) Supplementary measures:
         (a) Re-fuel.
         (b) Check that the aircraft is properly parked (refer to 10-10-00).
         (c) Check the logbook entries for remarks about faults or defects, and for correct number of landings and flight hours.
         (d) If necessary, moor the aircraft (refer to 10-20-00).

UNSCHEDULED MAINTENANCE CHECKS

1. General

A. Special checks are to be carried out when an incident has occurred that may have caused damage to the aircraft or impaired airworthiness.

In addition, a 25-hour inspection must be carried out on new aircraft and its engine, on overhauled engines and after extensive airframe repairs.

2. Special Checks

A. 25-Hour Inspection
After the first 25 hours of operation of a new aircraft and its engine or an overhauled engine or after extensive airframe repairs, an inspection of the extent of a 100-hour inspection must be carried out (refer to 05-20-00).

After the first 25 hours of operation of a new or overhauled engine, the engine and the propeller must be inspected. Refer to ROTAX Aircraft Engines Maintenance Manual for ROTAX Engines Type 912 Series for detailed information on this inspection.

B. Hard Landing
After an excessively hard landing or other unusual loading of the landing gear a thorough inspection of the affected components and their attachments is required. Even if no obvious defects are detectable, a visual inspection must be carried out. Perform the following:

(1) Prepare aircraft for visual checks as follows:
  (a) Remove engine cowling (refer to 71-10-00).
  (b) Remove landing gear fairings.
  (c) Inside the cabin and baggage compartment - remove carpets and floorboards as required to gain access to the landing gear mounting brackets (refer to 25-12-00).
(2) Inspect main landing gear.
  (a) Check wheel fairings for cracks, dents and delamination.
  (b) Check fairing mounts for cracks, distortion and other damage.
  (c) Check fuselage structure visually at such points and areas where the main landing gear is attached. Check for stress marks, distortion, disbonding, and delamination. Check main landing gear strut brackets for distortion, cracks and security of attachment. Check condition of the polyamide inserts. Check bolts for correct torque.
  (d) Check main gear struts for deformation and cracks. Examine wheel axles for security of attachment to struts and for any damage.
  (e) Inspect tires for integrity and proper location of the red slide marks.
  (f) Inspect brake fluid carrying lines at the main landing gear for condition, leakage, and security of attachment.

(3) Inspect nose landing gear.
   (a) Check wheel fairing for cracks, dents and delamination.
   (b) Inspect fairing mounts for cracks, distortion and other damage.
   (c) Check nose gear strut mount for deformation and cracks. Check nose gear strut journal bearing for proper operation and play.
   (d) Check strut for deformation, stress marks, and cracks. Check elastomer package for deterioration, cracks, correct fit and security. Check journal bearings of the elastomer package for play and condition.
   (e) Inspect nose wheel steering tubes for condition and excessive play.
   (f) Inspect tire for integrity and proper location of the red slide marks.
(4) Re-mount all items removed during the inspection.
(5) Perform a brake and steering system operational test (refer to 32-40-00).

C. Engine Fire
After an engine fire, carry out the following:

WARNING: IF IT IS SUSPECTED THAT PARTS OF THE STRUCTURE OR COWLING COULD HAVE BEEN DAMAGED BY HIGH TEMPERATURES (INDICATED BY BLISTERING ON THE PROTECTIVE COATING), THE MANUFACTURER MUST BE CONTACTED FOR DEFECT APPRAISAL BEFORE THE AIRCRAFT IS FLOWN AGAIN.

(1) Remove engine cowling (refer to 71-10-00).
(2) Examine engine cowling. Check for signs of fire damage.
(3) Disconnect battery (refer to 24-30-00).
(4) Examine electrical cables for damaged insulation.
(5) Examine fuel lines for damage of the fire-protection sleeves.
(6) Check oil lines for damage of the fire-protection sleeves.
(7) Check air filter element for fire damage.
(8) Examine engine mount and shock mounts for any fire damage.
(9) Check all other hoses and pipes, as well as all gaskets and seals for fire damage.
(10) Replace damaged items.
(11) Re-mount engine cowling (refer to 71-10-00).
(12) Perform an engine test run (refer to 05-20-00).

D. Violent Stop of the Engine
In event that the propeller has touched the ground or the engine has been inadvertently stopped violently (shock loading), the propeller gear box must be disassembled and inspected by an authorized workshop. For further information on engine inspections necessary after a propeller ground strike and for more general information, refer to the relevant technical documents and the ROTAX Maintenance Manual.

CAUTION: ONLY QUALIFIED TECHNICIANS (AUTHORIZED BY THE NATIONAL AVIATION AUTHORITY AND AFTER SUCCESSFULLY COMPLETING THE RELEVANT ROTAX TRAINING COURSE) ARE AUTHORIZED TO PERFORM THIS WORK.

Check additional equipment (external alternator, hydraulic governor, ignition unit, coolant and oil hoses) for damage.

CHAPTER 24

ELECTRICAL POWER

TABLE OF CONTENTS

Title	Chapter Section Subject	Page	Effectivity
ELECTRICAL POWER - GENERAL	24-00-00	1	
Introduction	24-00-00	1	
General Description	24-00-00	1	
ELECTRICAL POWER - TROUBLESHOOTING	24-00-00	101	
Troubleshooting	24-00-00	101	
ALTERNATOR SYSTEM - DESCRIPTION	24-20-00	1	
Introduction	24-20-00	1	
Description and Operation	24-20-00	1	
ALTERNATOR SYSTEM - MAINTENANCE	24-20-00	201	
General	24-20-00	201	
External Alternator Removal/Installation	24-20-00	201	
External Alternator Drive Belt Removal/Installation	24-20-00	201	
Rectifier-Regulator Unit Removal/Installation	24-20-00	203	Night-VFR
BATTERY SYSTEM - DESCRIPTION	24-30-00	1	
Introduction	24-30-00	1	
Description and Operation	24-30-00	1	
BATTERY SYSTEM - MAINTENANCE	24-30-00	201	
General	24-30-00	201	
Battery Removal/Installation	24-30-00	201	
Battery Relay Removal/Installation	24-30-00	201	
Battery Condition Check	24-30-00	203	
EXTERNAL POWER - MAINTENANCE	24-40-00	201	Ext. power
General	24-40-00	201	Ext. power
External Power Receptacle Removal/Installation	24-40-00	201	Ext. power
External Power Relay Removal/Installation	24-40-00	201	Ext. power
Adjustment/Test	24-40-00	203	Ext. power
Inspection/Check	24-40-00	203	Ext. power
ELECTRICAL LOAD DISTRIBUTION - DESCRIPTION	24-60-00	1	
Introduction	24-60-00	1	
Description and Operation	24-60-00	1	
CIRCUIT BREAKER - MAINTENANCE	24-61-00	201	
General	24-61-00	201	
Circuit Breaker Removal/Installation	24-61-00	201	
Circuit Breaker Current Ratings	24-61-00	201	

TABLE OF CONTENTS (Cont.)

Title	Chapter Section Subject	Page	Effectivity
ELECTRICAL SYSTEM WIRING - MAINTENANCE	24-97-00	201	
General	24-97-00	201	
Splicing	24-97-00	201	
Wire Replacement	24-97-00	201	

ELECTRICAL POWER - GENERAL

1. Introduction

   A. This chapter describes the units and components, which generate, control and supply AC and DC electrical power for other systems.

2. General Description

   A. The aircraft is equipped with a 12V DC electrical system. It is powered by a belt driven 600W alternator and a 12V battery which is installed on the front-right side of the firewall.
   All essential electrical accessories in the system are protected by circuit breakers. These are to be found on the right side of the instrument panel.
   Electrical power distribution to the various accessories is characterized through functionality and safety. It is accomplished by two main bus bars - the aircraft bus bar and the avionics bus bar.

   If the aircraft is equipped for Night-VFR, the internal alternator integrated in the ROTAX engine is activated in order to provide a second independent power source.
   To supply DC to the aircraft electrical system this permanent magnet generator is used in combination with a ROTAX specified rectifier-regulator, which is installed at the front-left side of the firewall.

   As an option, the aircraft may be equipped with an external power receptacle mounted on the right side of fuselage just forward of the firewall. The receptacle permits the use of an external power source for cold weather starting and maintenance procedures requiring reliable power for an extended period.

ELECTRICAL POWER - TROUBLESHOOTING

1. Troubleshooting

   A. If a power problem or a complete blackout occurs, first check all connections to the components and the circuit breakers.

   B. Troubleshooting Chart:

TROUBLE	POSSIBLE CAUSE	REMEDY
No alternator output, voltmeter indicates 12 V, ammeter indicates discharge	ALT 1 switch OFF Defective alternator Circuit breaker activated (open)	Turn switch ON. Replace alternator. Troubleshoot circuit and reset circuit breaker.
Battery will not supply power or is incapable of cranking engine.	Battery is discharged	Step 1: Place BAT switch and LDG LIGHT switch in ON Position. Measure battery voltage. A normally charged battery will indicate 12,5 volts or more. If . voltage is low, proceed to step 2. If voltage is normal proceed to step 3.
	Defective battery	Step 2: Charge battery approx. 30 minutes. If the battery tester indicates a good battery, the cause was a discharged battery. If the tester indicates a defective battery, replace the battery.
	Defective wiring or electrical connection between battery terminal and battery relay.	Step 3: With switch BAT in ON position, measure voltage between battery terminal and battery relay. Correct value would be 0 V. If voltage reads 0 V, proceed to step 4. If a voltage reading is obtained, check wiring between battery terminal and battery relay.
	Defective battery relay.	Step 4: With switch BAT in ON position, measure voltage between relay terminals. Correct value would be 0 V. If voltage reads 0 V, proceed to step 5.

	If a voltage reading is obtained, replace battery relay.
Defective wiring or electrical connection between battery relay and starter relay.	Step 5: With switch BAT in ON position, measure voltage between starter side relay terminal, and starter relay. Correct value would be 0 V. If a voltage reading is obtained, check wiring between starter side relay terminal and starter relay

ALTERNATOR SYSTEM - DESCRIPTION

1. Introduction

A. The alternator system supplies the electrical equipment with electrical power when the engine is running and is the main current source in the power supply design.

B. The alternator system consists of the following components:

- external alternator
- alternator circuit breaker
- alternator warning light
- alternator switch
- internal alternator (only Night-VFR equipped aircraft)
- rectifier-regulator unit (only Night-VFR equipped aircraft)

2. Description and Operation

A. The external alternator (ALT 1) is installed in the forward left side of the engine, to the left of the gearbox. It is belt-driven and incorporates an internal voltage regulator. The external alternator is supplied with an excitation voltage by the battery when the ALT1/BAT switch is turned ON. When the engine is running, the alternator generates a three-phase current that is rectified and regulated by the internal voltage regulator. The voltage regulator supplies a 14 V DC voltage to the aircraft bus when engine speed is at or above 800 rpm. The maximum current load is approx. 45 A.
The alternator circuit breaker is installed in the circuit breaker panel on the far right side of the instrument panel and it protects the system from overloading. The red ALT 1 warning light is located in the row of annunciator lights on the instrument panel and indicates undervoltage.

B. Aircraft equipped for Night-VFR additionally use the internal alternator (ALT 2) integrated in the ROTAX engine as a second independent power source. This permanent magnet alternator (250W) does not need any external voltage supply for excitation. To supply DC to the aircraft electrical system it is used in combination with a ROTAX specified rectifier-regulator unit, which is installed on the front-left side of the firewall. The red ALT 2 warning light is located in the row of annunciator lights on the instrument panel. It is controlled by the rectifier-regulator unit and indicates undervoltage.

C. An ammeter monitors power supply. The voltmeter is connected with the aircraft bus bar. The ammeter measures the charge or discharge current to/from the battery. Both instruments are found on the right side of the instrument panel in the instrument cluster.

D. The alternator warning lights and ammeter discharge indication may illuminate during low rpm with an electrical load on the system, for example during low rpm taxi. The lights will extinguish at higher rpm.

E. Refer to the ROTAX installation manual (P/N 898643) for more information on the external and internal alternators and the rectifier-regulator unit.

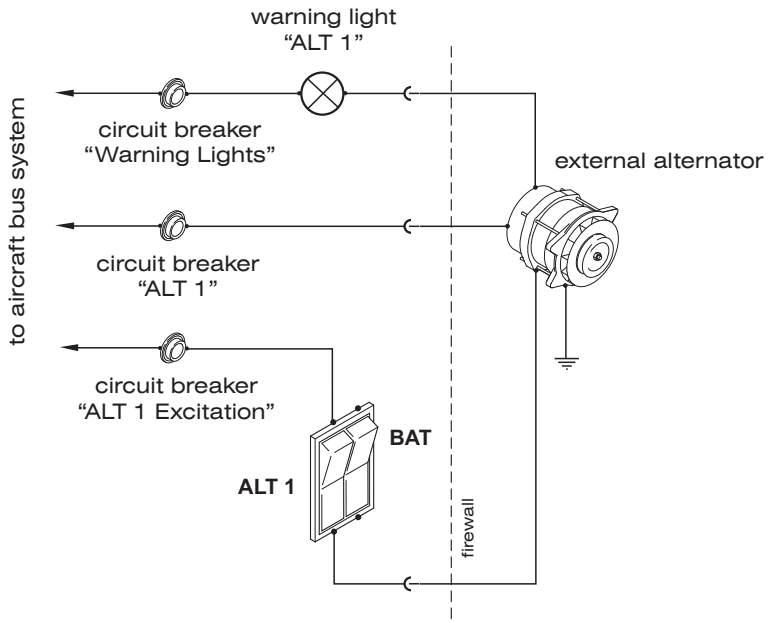

External Alternator System (Schematic)
Figure 1

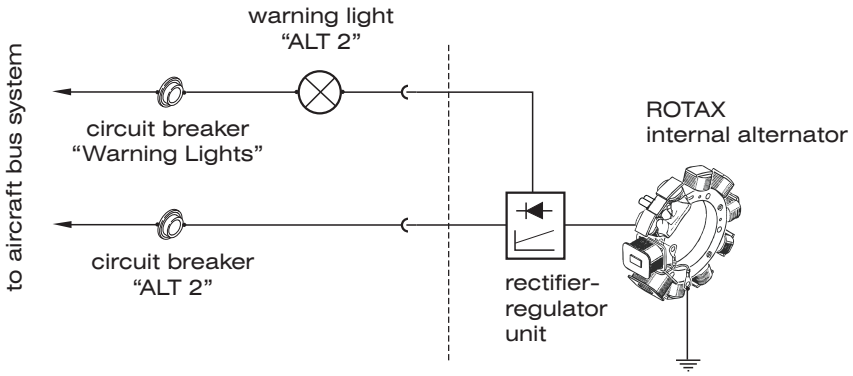

ROTAX Internal Alternator System (Schematic, Night-VFR equipped aircraft only)
Figure 2

ALTERNATOR SYSTEM - MAINTENANCE

1. General

A. Maintenance is limited to the removal and installation of the (external) alternator, drive belt and rectifier-regulator unit (only Night-VFR equipped aircraft). Refer to the appropriate ROTAX publications for maintenance procedures on the internal alternator.

2. External Alternator Removal/Installation

A. Remove External Alternator
(1) Ensure electrical power to aircraft and ignition switch is OFF. Remove key.
(2) Remove cowling (refer to 71-10-00).
(3) Disconnect battery (refer to 24-30-00).
(4) Disconnect electrical cables (include ground cable) from alternator.
(5) Cut safety wire and loosen adjusting bolt and alternator mounting bolts.
(6) Slip drive belt off alternator pulley.
(7) Remove mounting bolts securing alternator to engine. Remove alternator from engine.

B. Install External Alternator
(1) Position alternator into mounting bracket.
(2) Install shim and mounting bolt as shown in figure 201. Do not tighten yet.
(3) Loosely secure lower alternator mounting boss to adjustment cam using washers and bolt (refer to figure 201).
(4) Place drive belt on alternator pulley. Verify pulleys are aligned.

CAUTION: IF A NEW DRIVE BELT IS INSTALLED: THE ENGINE BELT TENSION SHOULD BE RECHECKED WITHIN THE FIRST 15 TO 20 HOURS OF OPERATION.

(5) Apply a torque wrench to the alternator pulley nut and adjust belt tension so the belt slips at:
(a) 10 - 12 Nm (88 - 106 in.lbs) of torque with a used belt;
(b) 15 - 18 Nm (133 - 159 in.lbs) of torque with a new belt
(6) Tighten adjusting bolt. Torque to 22 Nm (195 in.lbs).
(7) Tighten alternator mounting bolts.
(a) Torque M10 bolt (upper alternator mounting bracket) to 40 Nm (355 in.lbs).
(b) Torque M8 bolt to 22 Nm (195 in.lbs).
(8) Safety wire all bolts.
(9) Reconnect electrical cables including the ground cable.
(10) Reconnect battery (refer to 24-30-00).
(11) Install cowling (refer to 71-10-00).

3. External Alternator Drive Belt Removal/Installation

A. Remove Alternator Drive Belt
(1) Ensure electrical power to aircraft and ignition switch is OFF. Remove key.
(2) Remove engine cowling (refer to 71-10-00).
(3) Disconnect battery (refer to 24-30-00).

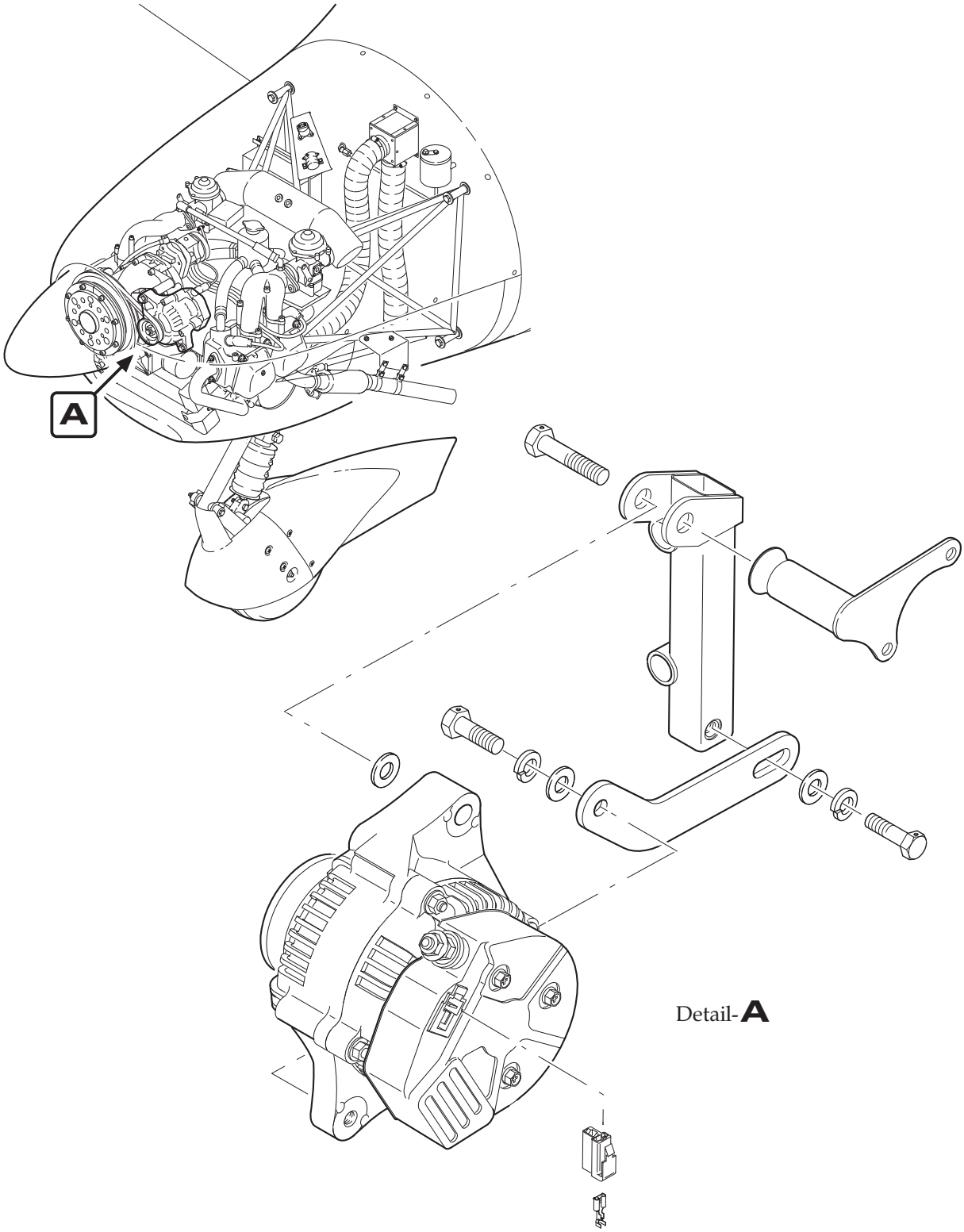

External Alternator Installation
Figure 201

(4) Cut safety wire and loosen adjusting bolt and alternator mounting bolts.
(5) Slip drive belt off alternator pulley.
(6) Remove propeller (refer to 61-10-00).
(7) Remove alternator drive belt.

B. Install Alternator Drive Belt
(1) Install alternator drive belt around drive pulley.
(2) Install propeller (refer to 61-10-00).
(3) Place drive belt on alternator pulley. Verify pulleys are aligned.

CAUTION: IF A NEW DRIVE BELT IS INSTALLED: THE ENGINE BELT TENSION SHOULD BE RECHECKED WITHIN THE FIRST 15 TO 20 HOURS OF OPERATION.

(4) Apply a torque wrench to the alternator pulley nut and adjust the belt tension so the belt slips at:
(a) 10 - 12 Nm (88 - 106 in.lbs) of torque with a used belt;
(b) 15 - 18 Nm (133 - 159 in.lbs) of torque with a new belt
(5) Tighten adjusting bolt. Torque to 22 Nm (195 in.lbs).
(6) Tighten alternator mounting bolts.
(a) Torque M10 bolt (upper alternator mounting bracket) to 40 Nm (355 in.lbs).
(b) Torque M8 bolt to 22 Nm (195 in.lbs).
(7) Safety wire all bolts.
(8) Reconnect battery (refer to 24-30-00).
(9) Install engine cowling (refer to 71-10-00).

4. Rectifier-Regulator Unit Removal/Installation (Ref. Fig. 202, Night-VFR equipped aircraft only)

A. Remove Rectifier-Regulator Unit
(1) Ensure electrical power to aircraft is OFF.
(2) Remove engine cowling (refer to 71-10-00).
(3) Disconnect battery (refer to 24-30-00).
(4) Disconnect all wires from rectifier-regulator unit.
(5) Remove the attachment bolt and the nuts from the mounting plate and rectifier-regulator unit. Attend to the "Nordlock" washers.

B. Install Rectifier-Regulator Unit
(1) Install the rectifier-regulator unit with two screws M8x20 (DIN ISO 4762), four "Nordlock" washers and two nuts M8 (DIN ISO 934) on the mounting plate. Attend to the various washers and their installation sequence.
(2) Connect the wire to the rectifier-regulator unit.
(3) Reconnect battery (refer to 24-30-00).
(4) Install engine cowling (refer to 71-10-00).

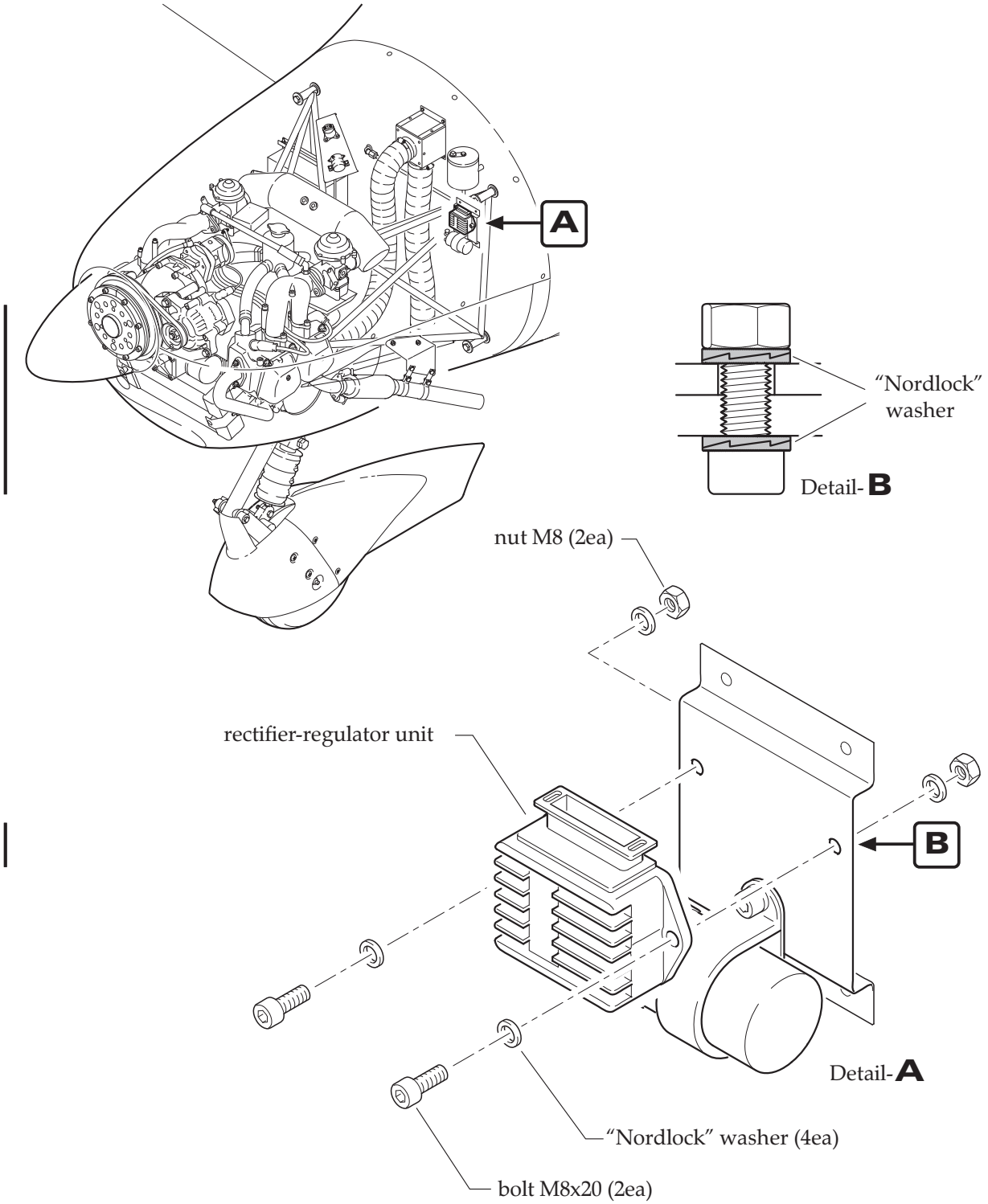

Rectifier-Regulator Unit Installation (Night-VFR equipped aircraft only)
Figure 202

BATTERY SYSTEM - DESCRIPTION

1. Introduction

A. The battery system supplies power to the electrical equipment if the alternator fails. It represents the auxiliary power source in supply design.

B. The battery system consists of the following components:

- battery
- battery relay
- BAT switch
- voltmeter
- ammeter

2. Description and Operation

A. The aircraft has a 12-volt, lead-acid battery, which is installed in a battery tray on the front-right side of the firewall. It is accessible by removing the upper engine cowling. The battery box is vented. The vent line discharges out of the bottom of the engine cowling, preventing the build up of dangerous or explosive gases in the engine compartment. The battery relay is fixed above the battery at the engine mount.

B. To connect the battery to the aircraft bus the BAT switch, located on the lower left instrument panel, must be in the ON position, thus connecting one battery relay terminal to aircraft ground. The other relay terminal is permanently supplied with a positive voltage by the battery. In this way the aircraft bus bar is supplied with current via the battery relay.
The voltmeter is connected with the aircraft bus bar. The ammeter measures the charge or discharge current to/from the battery via a shunt. Both instruments are located on the right instrument panel in the instrument cluster.

BATTERY SYSTEM (SCHEMATIC)

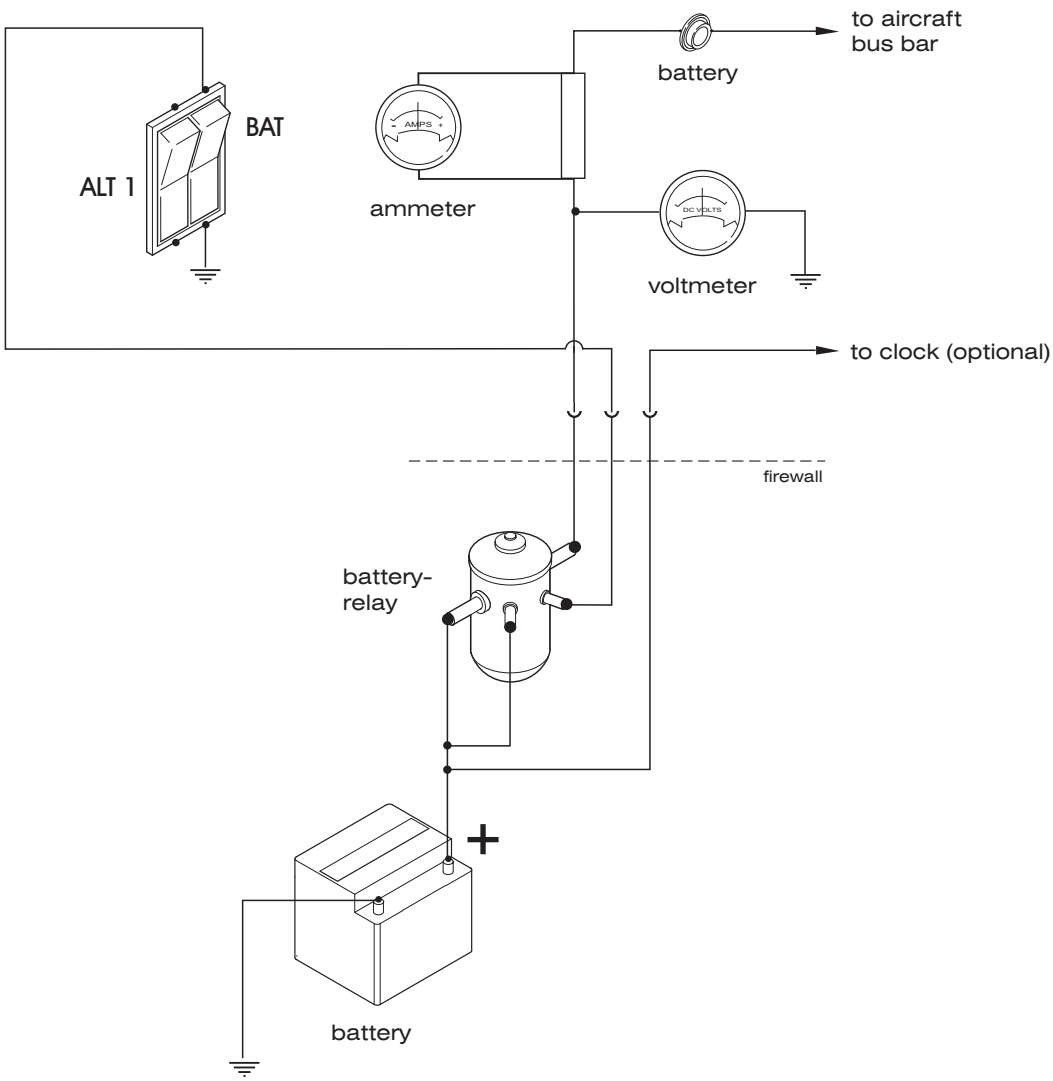

Battery System (Schematic)
Figure 1

BATTERY SYSTEM - MAINTENANCE

1. General

CAUTION: ALWAYS DISCONNECT THE BATTERY BEFORE DOING ANY MAINTENANCE ON THE ELECTRICAL SYSTEM. DISCONNECT THE NEGATIVE LEAD FIRST. RECONNECT THE NEGATIVE LEAD LAST. SECURE THE BATTERY LEADS FROM ACCIDENTAL CONNECTION DURING MAINTENANCE WORKS.

NOTE: It is recommended to remove the battery from the aircraft before doing any maintenance on the electrical system to avoid the risk of accidental connection.

A. Maintenance is limited to the removal and installation of the battery and the battery relay and a battery condition check. For information on the regular servicing required, refer to 12-17-00.

2. Battery Removal/Installation

A. Remove Battery
(1) Ensure BAT switch is in OFF position.
(2) Remove upper engine cowling (refer to 71-10-00).
(3) Remove battery hold down strap.
(4) Disconnect battery cables.
(5) Remove battery from mounting tray.

B. Install Battery
(1) Place battery into mounting tray and secure with battery hold down strap. Torque nuts to max. 2 Nm (18 in.lbs).

CAUTION: EXCESSIVELY HIGH TORQUES COULD RESULT IN DAMAGE TO THE BATTERY AND ESCAPING BATTERY ACID.

(2) Reconnect battery cables. Torque nuts to 6 Nm (53 in.lbs).
(3) Install engine cowling (refer to 71-10-00).

3. Battery Relay Removal/Installation (Ref. Fig. 201)

A. Remove Battery Relay
(1) Ensure electrical power to aircraft is OFF.
(2) Remove engine cowling (refer to 71-10-00).
(3) Disconnect battery (refer to 24-30-00).
(4) Identify and disconnect wires at battery relay.
(5) Remove nuts, washers and bolts securing relay to engine mount and remove relay from aircraft.

B. Install Battery Relay
   (1) Position and secure battery relay to engine mount using bolts, washers and nuts.
   (2) Identify and reconnect wires to relay.

   CAUTION: DO NOT REMOVE INNER NUT WHEN ASSEMBLING. USE WRENCH TO HOLD INNER NUT IN PLACE WHEN APPLYING OUTER NUT.

   (3) Reconnect battery (refer to 24-30-00).
   (4) Install engine cowling (refer to 71-10-00).

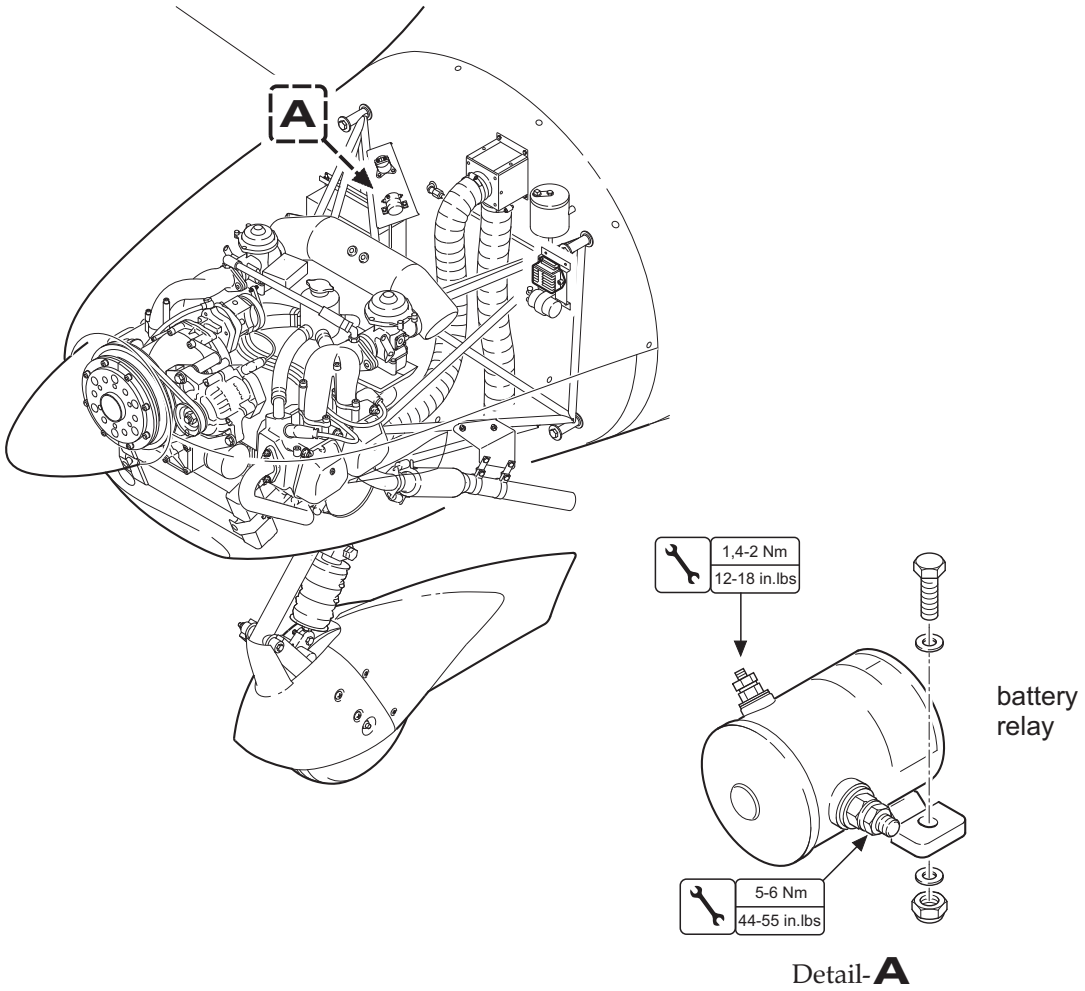

Battery Relay Installation
Figure 201

4. Battery Condition Check

For Night-VFR equipped aircraft, check the battery condition according to one of the following methods:

A. Measure „cold cranking amps“ (CCA) according to SAE using specialized test equipment (Schumacher PTI900X or similar). The battery is airworthy if the tester displays a CCA of at least 80% of the following test values:

Battery P/N	Battery description	CCA
AT01-8210-131	Odyssey PC-310	100
AT01-8210-130	Odyssey PC-1100	500
AT01-8210-129	Odyssey PC-950	400
AT01-8210-128	Exide Sprinter P12V600	200
AT01-8210-125	Concorde RG25XC	350

B. Measure capacity by discharging the battery with a current of approximately 10% of the battery capacity. Use automated test equipment that stops discharging at a voltage not lower than 11,0 Volts. The battery is airworthy if the measured capacity is at least 19 Ampere-hours.

NOTE: Method B is harder on the battery and takes more time, but is more accurate. Test only fully charged batteries and re-charge battery immediately after test.

NOTE: Batteries with P/N AT01-8210-123, AT01-8210-122, AT01-8210-121, AT01-8210-120 and AT01-8210-100 are NOT approved for Night-VFR!

NOTE: Select battery type „AGM“, „SLA“ or „VRLA“ if a setting is available in the test equipment.

EXTERNAL POWER - MAINTENANCE

1. General

A. This section covers that portion of the system which connects external electrical power to the aircraft's electrical systems. It includes items such as external power receptacle and relays.

B. As an option the aircraft may be equipped with an external power receptacle mounted on the right side of the engine mount, just below the battery. The standard, oval shaped, 3-pin receptacle is accessible through an hinged access plate in the right side of the engine cowling. Furthermore, the system includes an external power relay attached to the engine mount and a relay behind the instrument panel. For wiring refer to 91-00-00.
When a 12 V DC power supply is connected to the external power receptacle the shorter, third connector engages the external power relay, which connects the external power to the aircraft main bus. Simultaneously, the battery switch will be disconnected from the ground terminal by the second relay behind the instrument panel. This prevents an energizing of the battery relay while an external power supply is being used.
The signal power to the external power relay contains an isolation diode to prevent reverse polarity.

C. Maintenance is limited to the removal and installation of components.

2. External Power Receptacle Removal/Installation (Ref. Fig. 201)

A. Remove External Power Receptacle
(1) Ensure electrical power to aircraft is OFF.
(2) Remove engine cowling (refer to 71-10-00).
(3) Disconnect battery (refer to 24-30-00).
(4) Identify and disconnect all wires at EPU receptacle.
(5) Remove nuts, washers and bolts securing receptacle to engine mount and remove receptacle.

B. Install External Power Receptacle
(1) Position and secure EPU receptacle to engine mount using bolts, washers and nuts.
(2) Identify and reconnect wires to EPU receptacle.
(3) Reconnect battery (refer to 24-30-00).
(4) Install engine cowling (refer to 71-10-00).
(5) Perform an external power system functional check (refer to “Adjustment/Test” below).

3. External Power Relay Removal/Installation (Ref. Fig. 201)

A. Remove External Power Relay
(1) Ensure electrical power to aircraft is OFF.
(2) Remove engine cowling (refer to 71-10-00).
(3) Disconnect battery (refer to 24-30-00).
(4) Identify and disconnect wires at external power relay.
(5) Remove nuts, washers and bolts securing relay to engine mount and remove relay.

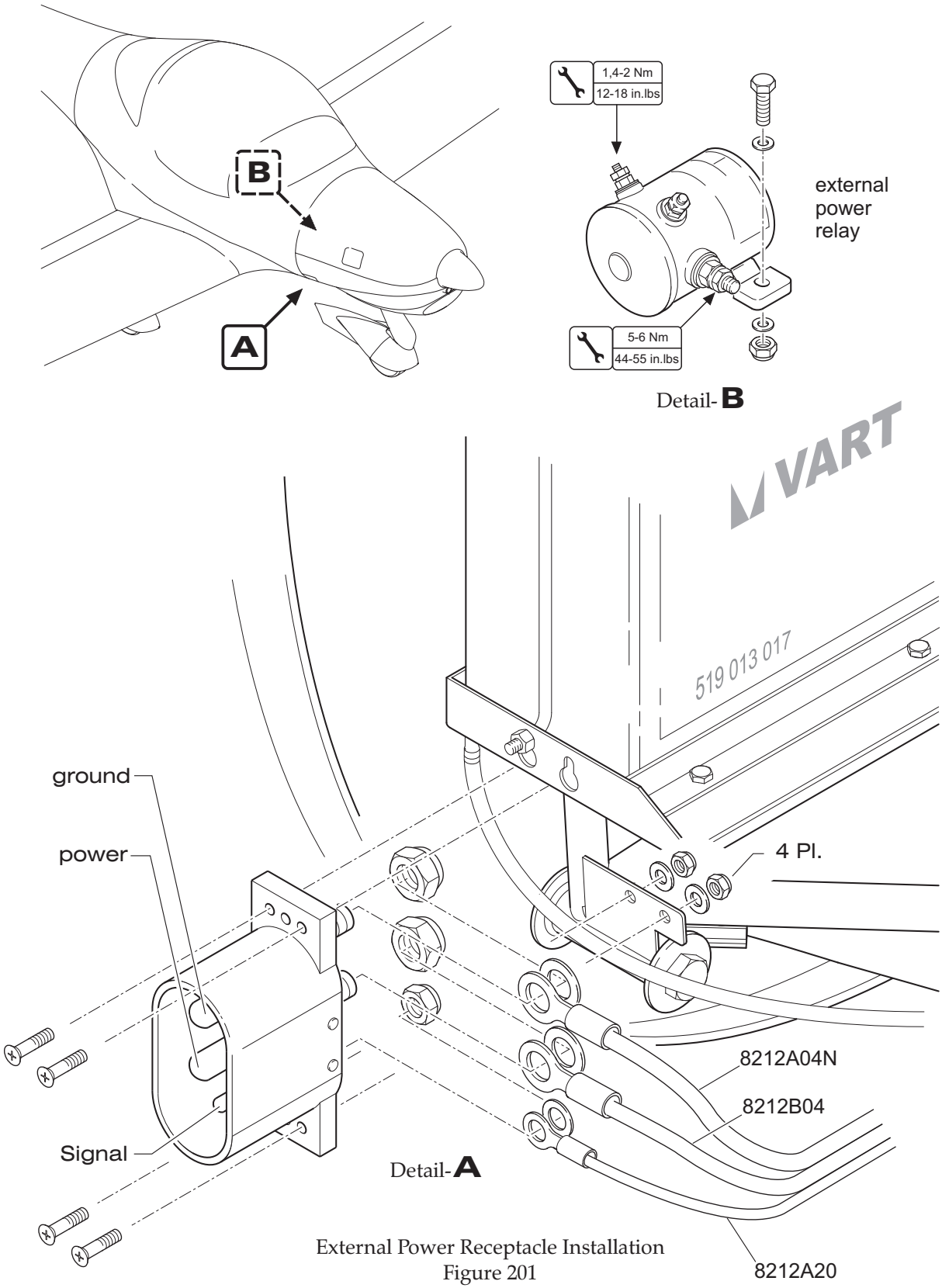

External Power Receptacle Installation
Figure 201

B. Install External Power Relay
(1) Position and secure external power relay to engine mount using bolts, washers and nuts.
(2) Identify and reconnect wires to external power relay.

CAUTION: DO NOT REMOVE INNER NUT WHEN ASSEMBLING. USE WRENCH TO HOLD INNER NUT IN PLACE WHEN APPLYING OUTER NUT.

(3) Reconnect battery (refer to 24-30-00).
(4) Install engine cowling (refer to 71-10-00).
(5) Perform an external power system functional check (refer to "Adjustment/Test below).

4. Adjustment/Test

A. External Power System Functional Check
(1) Connect an 14 V DC external power supply to aircraft.
(2) Place the BAT switch to the ON position.
(3) Verify the voltmeter shows 14 V.
(4) Disconnect external power supply from aircraft.
(5) The voltmeter must show 12 V.
(6) Place the BAT switch in OFF position.

5. Inspection/Check

A. External Power System Inspection/Check
(1) Check latching mechanism and hinge of the external power access plate for integrity and condition.
(2) Remove engine cowling (refer to 71-10-00).
(3) Remove glare shield (refer to 31-10-00).
(4) Check external power receptacle for security.
(5) Check system relays for condition and security.
(6) Inspect electrical cables of the system for proper routing, chafing, broken or loose terminals, general condition, and sharp bends in wiring.
(7) Verify the external power placard is firmly in place and legible.
(8) Install glare shield (refer to 31-10-00).
(9) Install engine cowling (refer to 71-10-00).

ELECTRICAL LOAD DISTRIBUTION - DESCRIPTION

1. Introduction

A. Distribution of electrical power supplied by the external and optional the internal alternator and the battery is accomplished by bus bars. The bus architecture allows power to be routed to the essential circuitry if any one of the main power sources fails.
All essential electrical accessories in the system are protected by push pull type circuit breakers which can be reset in flight. The circuit breaker panel is on the far right of the instrument panel and each circuit breaker is labeled. All circuit breakers have their rated values identified on the top of the shaft.

B. For power routing throughout the aircraft, refer to wiring diagrams shown in 91-00-00.

2. Description and Operation

A. The electrical system has two main bus bars: the aircraft bus bar and the avionics bus bar. All systems are connected to the aircraft bus bar which are essentially for aircraft operation. The avionics bus bar supplies the avionics equipment with power.

B. The external alternator output and the battery are connected with the aircraft bus via 50A circuit breakers. Optional the internal alternator is connected with the aircraft bus via a rectifier-regulator unit and a 25A circuit breaker. The circuit breakers are located on the right side of the instrument panel in the circuit breaker panel.
The current is distributed from the aircraft bus bar via circuit breakers to the electrical circuits of several systems and components and via the AVIONICS switch to the avionics bus bar. From there, it is further distributed to the several components of the avionics equipment via circuit breakers. The AVIONICS switch allows avionics equipment to be removed separately from the residual electrical system.

CIRCUIT BREAKER - MAINTENANCE

1. General

A. The circuit breaker panel is equipped with circuit breakers of the "push to reset" type. One terminal of each switch/breaker is directly connected to the appropriate bus bar, the other is wired to the component/system it protects.

2. Circuit Breaker Removal/Installation

A. Remove Circuit Breaker
(1) Ensure electrical power to aircraft is OFF.
(2) Disconnect battery (refer to 24-30-00).
(3) Remove glareshield (refer to 31-10-00).
(4) Disconnect wire(s) and bus to the selected circuit breaker.
(5) Remove retaining ring and washer from circuit breaker on the front of instrument panel.
(6) Remove circuit breaker.

NOTE: It may be necessary to loosen more than one circuit breaker to remove the selected circuit breaker.

B. Install Circuit Breaker
(1) Place circuit breaker(s) into position on the instrument panel and secure.
(2) Identify and connect wire(s) and bus to the selected circuit breaker.
(3) Reinstall glareshield (refer to 31-10-00).
(4) Reconnect battery (refer to 24-30-00).

3. Circuit Breaker Current Ratings

A. Refer to table 201 for circuit breaker current ratings.

Table 201: Circuit Breaker Current Ratings

Current Rating	Circuit Breaker	Effectivity
50A	ALT1 BAT	
30A	Switch Panel	
25A	ALT2	
10A	Flap Actuator COM1 & 2	GTN 650, GNS 430W, GTR 225, GNC 255

Table 201: Circuit Breaker Current Ratings (Cont.)

Current Rating	Circuit Breaker	Effectivity
7.5A	MFD NAV/GPS 1 & 2 PFD	Aspen GTN 650 G500
5A	Trim Actuator AHRS ADC 12V Receptacle Audio GPS TXP COM1 & 2 MFD NAV/GPS1 & 2	 G500 G500 GMA 340, GMA 350 GPS Map 69X, Aera 79X GTX 328, GTX 330 SL30, SL40 Flymap + AHRS GNS 430W
4A	NAV/GPS1 & 2	GNC 255
3A	Dome Light Attitude Indicator Turn Coordin. Directional Gyro TXP	 TT-22, VT-02, VT2000
2A	Warning Lights Trim Control Flap Control Starter Relay ALT1 Excitation Stall Warning CHT (OAT) Fuel Gauge Instruments 1 Instruments 2 Panel Light Avionic Blower Traffic Monitor Encoder Audio NAV/GPS1 NAV/GPS2 GPS	 TRX 1500, TRX 2000 ACK-A30 PM 501, PM 500EX SL30, CDI1 SL30, CDI2 GPS Map 495, GPS Map 496, Aera 5XX

ELECTRICAL SYSTEM WIRING - MAINTENANCE

1. General

   A. Repairs of the electrical system wiring are limited to the replacement and splicing of electrical wires. In general all repairs have to be carried out by certified repair stations or properly certified and trained persons.

   B. Carry out a complete functional check of the concerned equipment after every repair.

   C. Refer to 91-00-00 for wiring diagrams and wire routing diagrams.

2. Splicing

   A. Splicing is permitted on wiring as long as it does not affect the reliability and the electromechanical characteristics of the wiring. Splicing of power wires, coaxial cables, shielded wires or wire sizes above AWG 18 is not permitted. There should not be more than one splice in any one wire segment between any two connectors or other disconnect points. Refer to AC 43.13-1B, chapter 11, section 13 “Splicing” for further information on splicing procedures and equipment.

3. Wire Replacement

   A. If wires are replaced, they have to be replaced by identical ones (same MIL specification and AWG). New wires have to be routed, fixed and protected in the same manner as the old wires.

CHAPTER 57

WINGS

TABLE OF CONTENTS

Title	Chapter Section Subject	Page
WINGS - GENERAL	57-00-00	1
Introduction	57-00-00	1
General Description	57-00-00	1
WINGS - MAINTENANCE	57-00-00	201
General	57-00-00	201
Tools, Equipment and Material	57-00-00	201
Wings Removal/Installation	57-00-00	201
Wing Attachment Bolt Removal/Installation	57-00-00	206
CONTROL SURFACES - MAINTENANCE	57-50-00	201
General	57-50-00	201
Flaps Removal/Installation	57-50-00	201
Ailerons Removal/Installation	57-50-00	201
Adjustment - Control Surface Balancing	57-50-00	203

WINGS - GENERAL

1. Introduction

   A. This chapter describes the wing, flaps and aileron structures. It also provides maintenance information.

2. General Description

   A. The wings are made from composite materials which provide very smooth and seamless flight surfaces. They are of a cantilever, semi-monocoque design, with a one-piece main spar, ribs and shear webs covered with top and bottom shells. The wing trailing edge contains conventional ailerons and flaps. Each wing incorporates an integral fuel tank which is located in front of the main spar at the inboard portion of the wing.

WINGS - MAINTENANCE

1. General

A. The wing structure is shown in figure 201. The wing main spar is made in one piece. The I-section spar has caps made from unidirectional carbon-fiber and a GFRP composite sandwich web.
The ribs, including the flap control ribs and the shear webs are of a rigid GFRP molding. The wing top and bottom shells are bonded to the spar, ribs and aft shear web forming a torsion box that carries all of the wing bending and torsion loads. Each shell has a sandwich structure with a rigid foam core.
The wing main spar passes under the fuselage below the two seats. Each wing half ends inboard with a front root rib and a rear root rib which are mounted to the fuselage center section with a bolt each. The four lateral force bolts are inserted from the cabin through the fuselage bushings into the wing bolt casings and secured axially with screws. The bushes and bolts transfer shear loads into the fuselage center section.

B. The section provides removal and installation instructions for the wings and the wing bolts.

2. Tools, Equipment and Material

	Quantity	Equipment	Parts No.	Manufacturer
3.A./B.	1	Wing stand	-	AQUILA Aviation Intl. GmbH
3.A./4.A	1	Wing attachment bolt removal tool	-	AQUILA Aviation Intl. GmbH

3. Wing Removal/Installation

CAUTION: AT LEAST SEVEN PERSONS ARE NEEDED FOR WING REMOVAL OR INSTALLATION. A SHORT BRIEFING IS RECOMMENDED PRIOR TO STARTING WITH PROCEDURES.

A. Remove the Wing
(1) Prepare a suitable, padded stand for proper storage of the removed wing.

NOTE: It is recommended to use the special wing stand which may be obtained from AQUILA Aviation International GmbH.

(2) Shock the main wheels fore and aft.
(3) Ensure electrical power to aircraft is OFF.
(4) Disconnect battery (refer to 24-30-00).
(5) Ensure the fuel selector/shut-off valve is in OFF position.
(6) Drain fuel from wing fuel tanks.
(7) Remove access/inspection plates 210 AB (refer to 06-10-00), 211 BB and 211 JB (refer to 25-12-00).
(8) Remove elevator pushrod 1 (refer to 27-30-00).

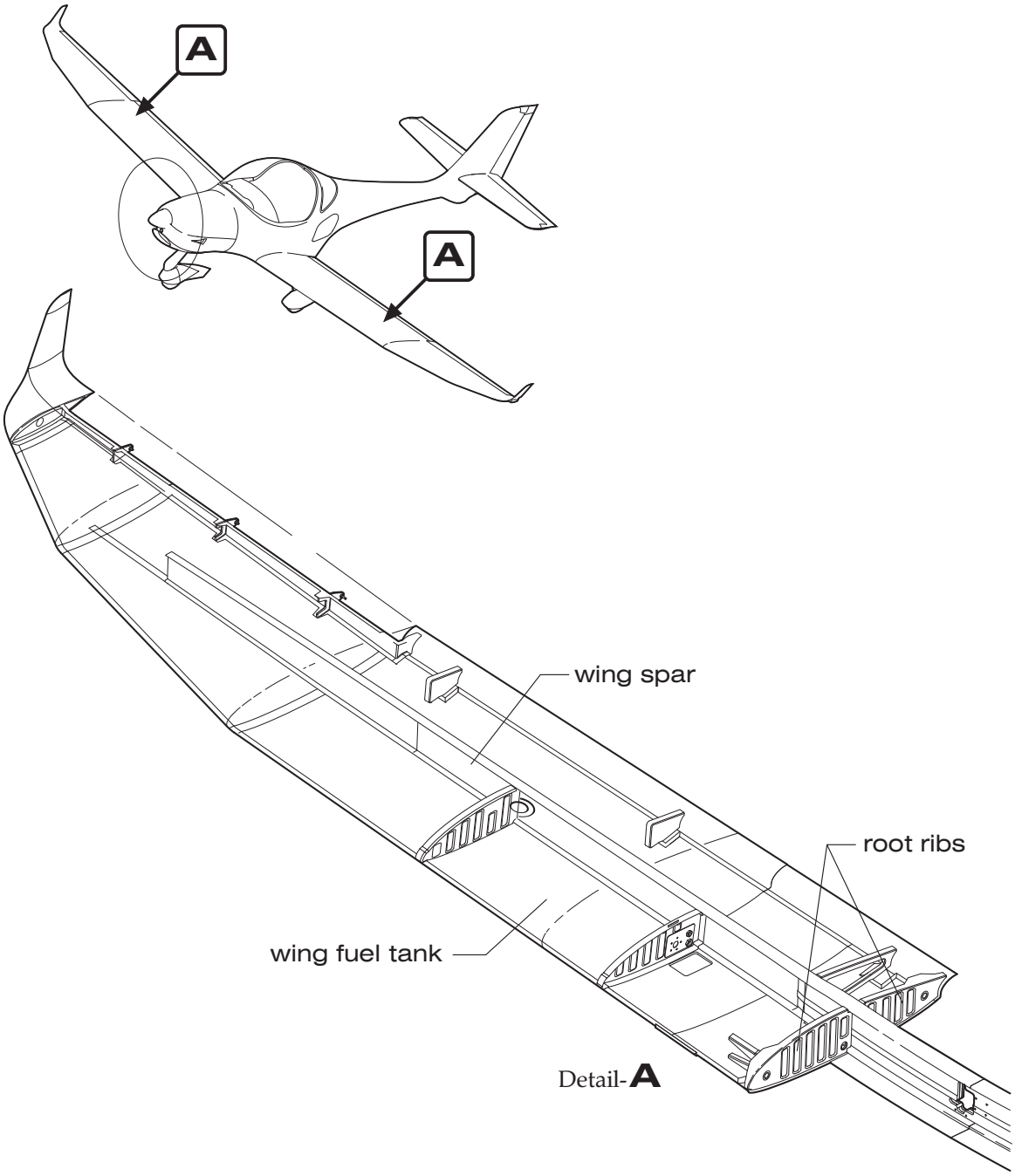

Wing Structure
Figure 201

(9) Disconnect electrical wires at connector inside the spar tunnel.
(10) Disconnect fuel lines (four places).
(11) Identify and disconnect pitot and static lines at water traps.
(12) Disconnect aileron front from aileron rear bellcrank (refer to 27-10-00).
(13) Disconnect flap actuator from flap torque tube assembly (refer to 27-50-00).

NOTE: Tape flaps in the streamlined position during wing removal. This will prevent flap movement during handling.

CAUTION: FOR THE REST OF THIS PROCEDURE AT LEAST ONE PERSON MUST SUPPORT/LIFT EACH WING AT THE OUTBOARD END, AT LEAST ONE PERSON MUST SUPPORT/LIFT THE LEADING EDGE AT THE ROOT RIB OF EACH WING HALF, AND AT LEAST ONE PERSON MUST SUPPORT/LIFT THE TRAILING EDGE AT THE ROOT RIB OF EACH WING HALF.

DO NOT LIFT THE WING AT ANY CONTROL SURFACE!

(14) From inside the cabin, remove bolts securing wing attachment bolts.
(15) Supporting the wing, remove wing attachment bolts.
(a) Install wing attachment bolt removal tool.
(b) Extract the bolt.

NOTE: It may be necessary to rock the wing slightly to remove attachment bolts.

CAUTION: PAY ATTENTION TO LANDING GEAR STRUTS AND AILERON BELLCRANK IN THE FUSELAGE BELLY.

(16) Remove wing carefully from aircraft and lay on padded stand.

B. Install the Wing
(1) Perform a pre-installation check.
(a) Examine the wing attachment bolt bushings for damage and condition. Look especially at the inner faces.
(b) Examine the wing root ribs and the outer ribs of the fuselage center section for damage and condition. Check the area around the bushings. Check for looseness between bushings and ribs.
(c) Check the wing attachment bolts for any damage and condition.
(2) Position wing to the aircraft and install wing attachment bolts.

NOTE: Grease wing attachment bolts lightly before installing bolts (refer to 12-22-00).

(3) Install bolts securing wing attachment bolts. Torque to 11,5 Nm (102 in.lbs) and secure (up to S/N 331: safety wire / from S/N 332: use safety plate [Use adjusting washers to assure correct torque and correct position of bolt head to cut-out in safety plate.]).
(4) Connect flap actuator to flap torque tube assembly (refer to 27-50-00) inside the spar tunnel.
(5) Connect aileron front to aileron rear bellcrank (refer to 27-10-00).
(6) Connect fuel lines (four places).
(7) Reconnect pitot and static lines.
(8) Connect electrical wires at connector.

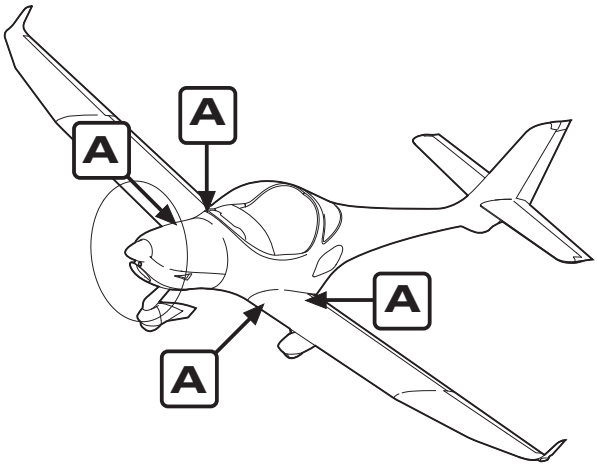

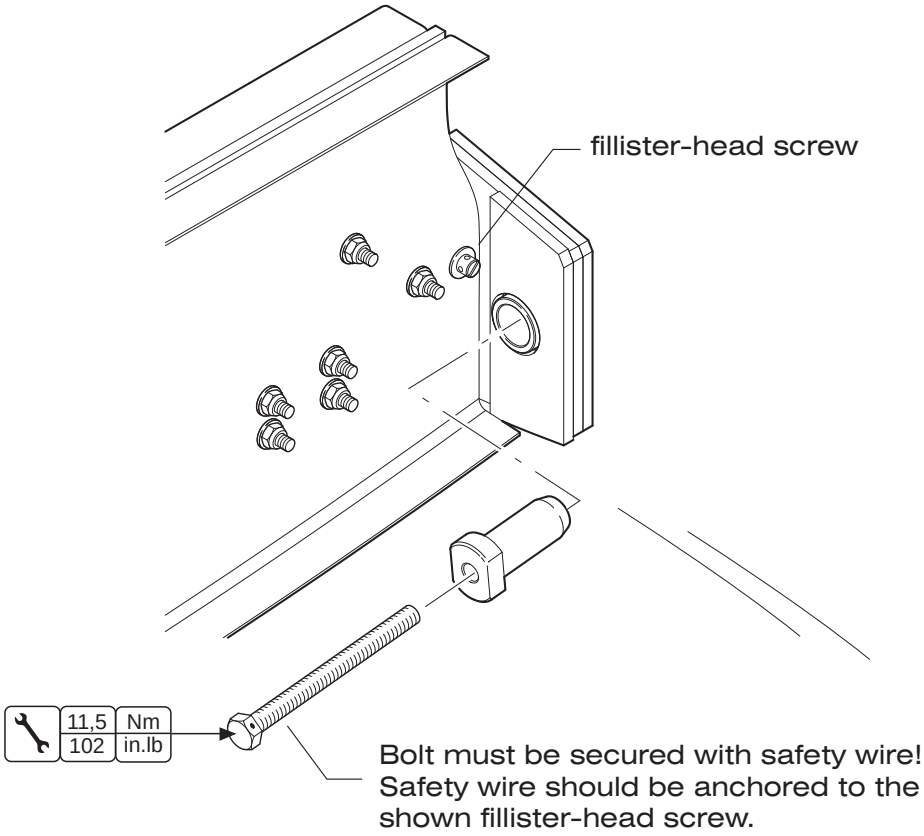

Note: The rear right location is shown.

Wing Bolt Installation
Figure 201

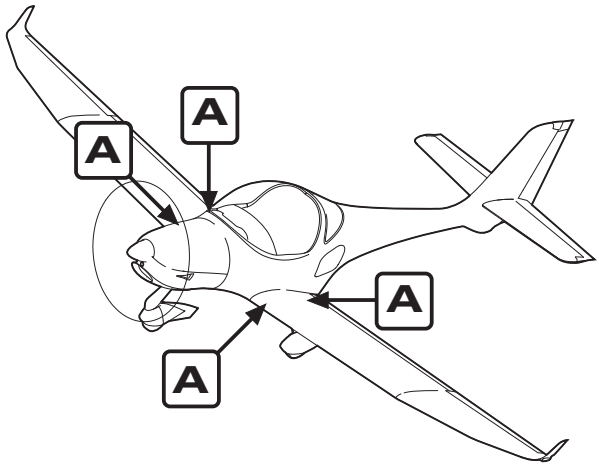

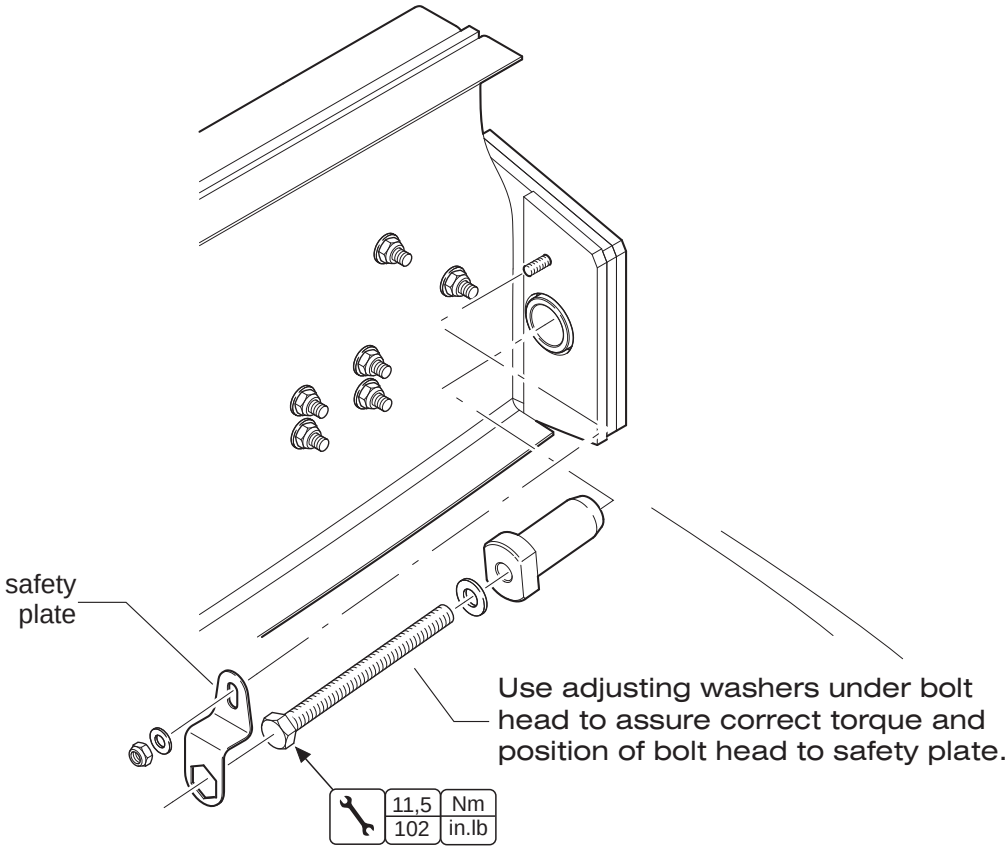

Note: The rear right location is shown.

Wing Bolt Installation
Figure 201

(9) Install elevator pushrod 1 (refer to 27-30-00) from inside the cabin.
(10) Re-fuel wing tanks. Check fuel lines and fittings inside the spar tunnel for signs of leakage.
(11) Reconnect battery (refer to 24-30-00).
(12) Perform aileron control system inspection/check (refer to 27-10-00).
(13) Perform elevator control system and elevator trim system inspection/check and adjust system if necessary as described in 27-30-00 and 27-31-00.
(14) Perform flap control system inspection/check and adjust system if necessary as described in 27-50-00.
(15) Check NAV lights, strobe lights, stall warning system and pitot/static system for proper operation.
(16) Perform fuel level indicating system functional test (refer to 28-41-00).
(17) Install access/inspection plates and upholstery removed during maintenance.

4. Wing Attachment Bolt Removal/Installation

NOTE: This procedure is to be used if one wing attachment bolt has to be removed for maintenance purposes.

CAUTION: DURING THIS PROCEDURE AT LEAST ONE PERSON MUST SUPPORT/LIFT THE WING AT THE OUTBOARD END, AT LEAST ONE PERSON MUST SUPPORT/LIFT THE LEADING EDGE AT THE ROOT RIB OF THE WING HALF AND AT LEAST ONE PERSON MUST SUPPORT/LIFT THE TRAILING EDGE AT THE ROOT RIB OF THE WING HALF.
DO NOT REMOVE MORE THAN ONE WING ATTACHMENT BOLT AT A TIME!
DO NOT LIFT THE WING AT ANY CONTROL SURFACE!

A. Remove a Wing Attachment Bolt
(1) Remove access/inspection plates 211 BB and 211 JB (refer to 25-12-00).
(2) Remove bolt securing wing attachment bolt from inside the cabin.
(3) Supporting the wing, remove wing attachment bolt.
(a) Install wing attachment bolt removal tool.
(b) Extract the bolt.

NOTE: It may be necessary to rock the wing slightly to remove attachment bolts.

B. Install a Wing Attachment Bolt
(1) Perform a pre-installation check.
(a) Examine the wing attachment bolt bushing for damage and condition. Look especially at the inner faces.
(b) Check the wing attachment bolt for any damage and condition.
(2) Install wing attachment bolts.

NOTE: Grease wing attachment bolts lightly before installation (refer to 12-22-00).

(3) Install bolts securing wing attachment bolts. Torque to 11,5 Nm (102 in.lbs) and secure (up to S/N 331: safety wire / from S/N 332: use safety plate [Use adjusting washers to assure correct torque and correct position of bolt head to cut-out in safety plate.]).
(4) Reinstall access/inspection plates 211 BB and 211 JB (refer to 25-12-00).

CONTROL SURFACES - MAINTENANCE

1. General

A. The flap structure is shown in figure 201. The top and bottom shells have a sandwich structure with a rigid foam core. GFRP molded ribs are bonded between the shells. A flap hinge arm is bonded to each rib.

B. The aileron structure is shown in figure 201. The top and bottom shells have a sandwich structure with a rigid foam core. GFRP molded hinge brackets are bonded between the shells in the front area. The aileron horn is also bonded to the most inboard bracket.
A ground-adjustable trim tab at the leading edge of the left aileron is provided to correct the tendency to roll precisely. The trim tab is mounted to the aileron with screws, washers and nuts.

C. This section contains instructions for flaps and aileron removal and installation as well as control surface balancing procedures.

D. Figure 201 shows the flaps and aileron structure.

2. Flap Removal/Installation

A. Remove a Flap
(1) Retract flaps fully.

CAUTION: WHEN DISCONNECTING FLAP PUSH-PULL ROD FROM FLAP HORN, EXERCISE CAUTION TO PREVENT THE FLAP FROM INADVERTENT SWINGING DOWNWARD.

(2) Supporting the flap, disconnect flap push-pull rod at the flap horn.
(3) Allow the flap to swing down and remove three castellated nuts securing flap on hinge pins.
(4) Slide flap inboard clear of the hinge pins and remove flap from wing.

B. Install Flaps
(1) Put the flap in position and secure with washer and castellated nut at each of the three hinge mounts.
(2) Connect flap push-pull rod to flap horn.
(3) Secure three castellated nuts with cotter pins.
(4) Check proper operation of flaps.

3. Aileron Removal/Installation

A. Remove Aileron
(1) Extend the flaps completely.
(2) Remove castellated nut securing the aileron to hinge pins at the inboard hinge.
(3) Slide aileron inboard clear of the hinge pins and remove aileron from wing.

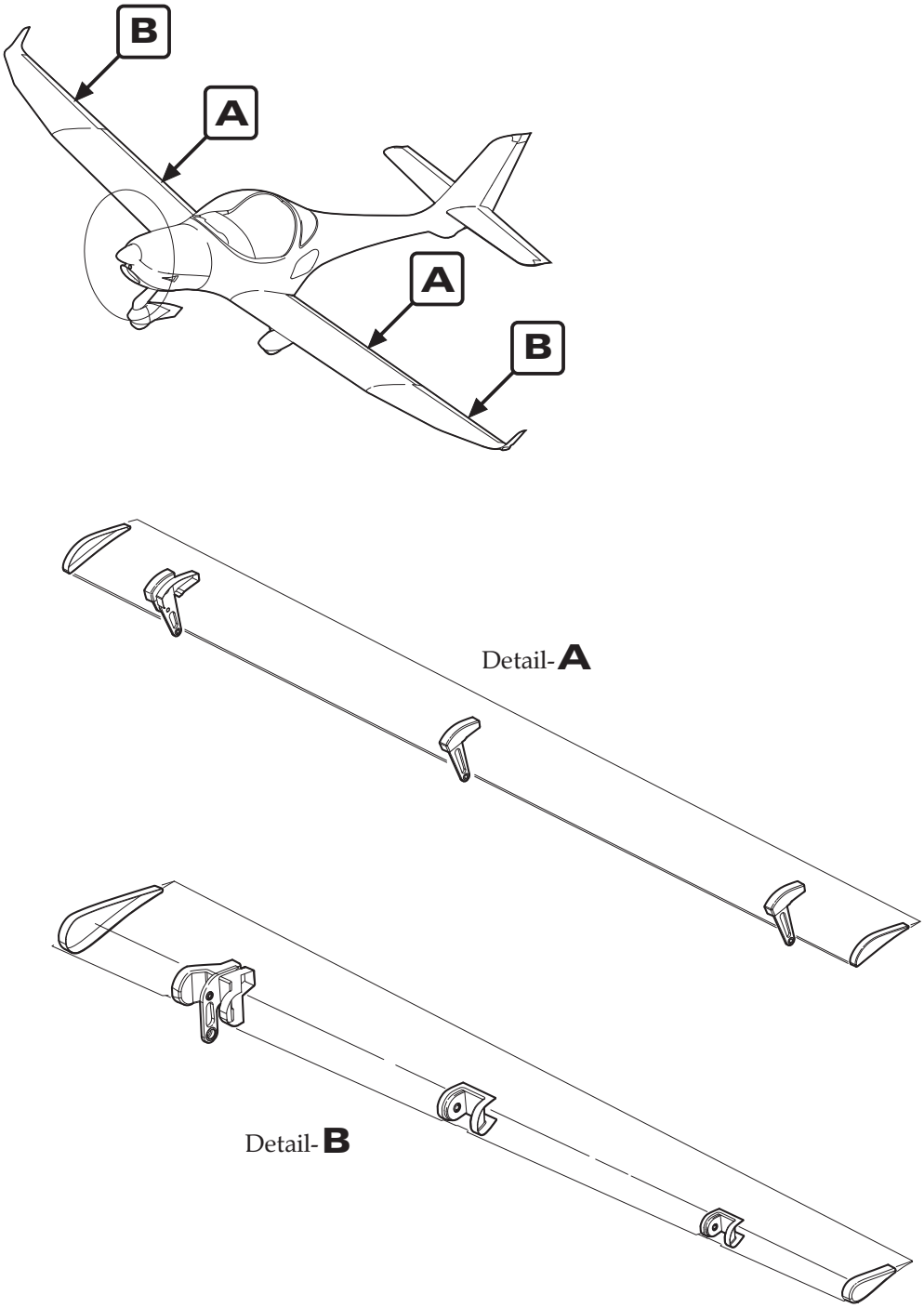

Flap/Aileron Structure
Figure 201

B. Install Aileron
(1) Put the aileron in position and secure with washer and castellated nut at inboard hinge. Secure castellated nut with cotter pin.
(2) Connect aileron push-pull rod to aileron horn.
(3) Check proper aileron control system operation.
(4) Check proper aileron travel. Adjust if necessary (refer to 27-10-00).

4. Adjustment - Control Surface Balancing

Weighing and the determination of control surface moment should be performed after repairs or painting. The residual moment of the control surface and its maximum permissible total weight must be within the ranges as specified in 06-10-00.

To weigh a control surface, it must be removed from the aircraft. Weighing can be accomplished using any convenient method.

WARNING: CORRECT CONTROL SURFACE BALANCE IS IMPORTANT FOR FLIGHT SAFETY. OUT OF BALANCE CONTROL SURFACES CAN FLUTTER AND CAUSE STRUCTURAL FAILURE.

A Aileron Balancing

NOTE: Calculate the static control surface moment as follows: M = F x r [Nm]

NOTE: The following procedure is analogous for left and right aileron.

(1) Disconnect aileron from aileron push-pull rod.
(2) Weigh by means of a conventional spring balance at the given weighing point (refer to figure 204).
(a) Attach spring balance at weighing point. The initial position of the aileron for each measurement should be parallel to the chord line.

NOTE: The chord line is defined as the line extending from the trailing edge through the hinge line.

(b) Raise the spring balance slowly until the control surface begins to move. Note the reading and the direction of the movement (i.e. 11,2 N up).
(c) Lower the spring balance slowly until the control surface begins to move. Note the reading and the direction of the movement to (i.e. 11,8 N down).
(3) Calculate the moments as described above. Both results must be within the permitted limits.

B Wing Flap Balancing

NOTE: Calculate the static control surface moment as follows: M = F x r [Nm]

(1) Disconnect flap actuator from torque tube coupler (refer to 27-50-00).
(2) Weigh by means of a conventional spring balance at the given weighing point (refer to figure 204).

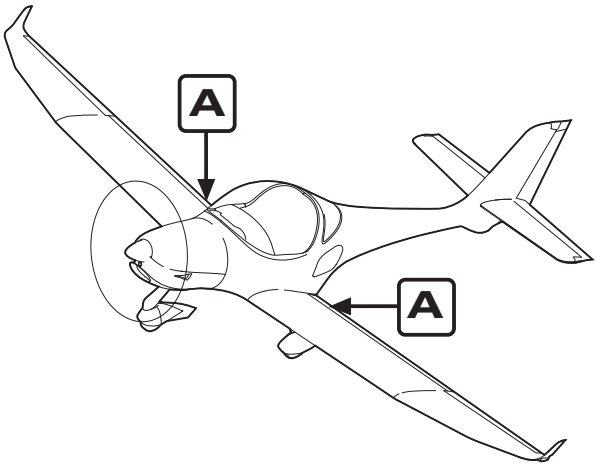

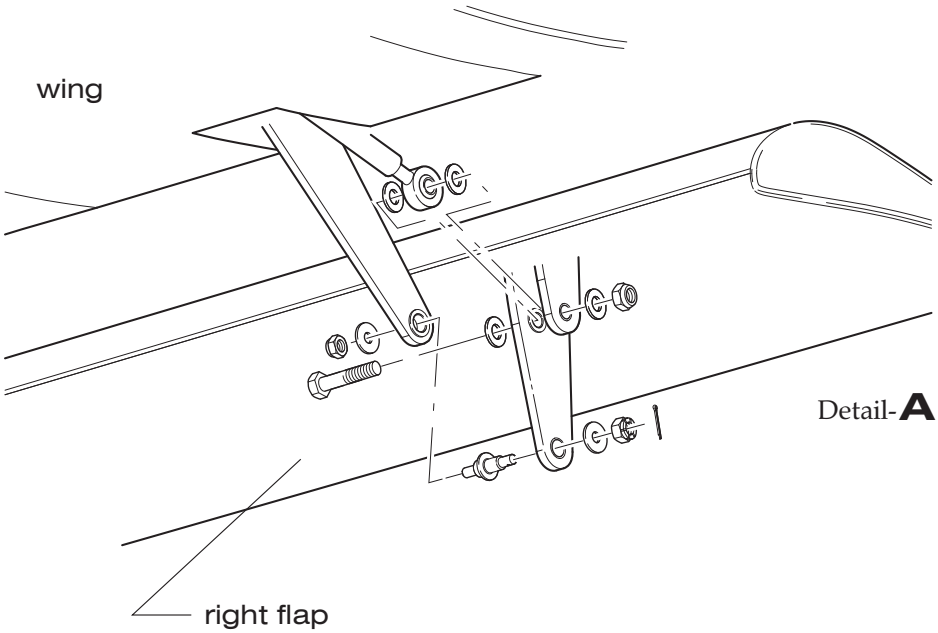

Flap Installation
Figure 202

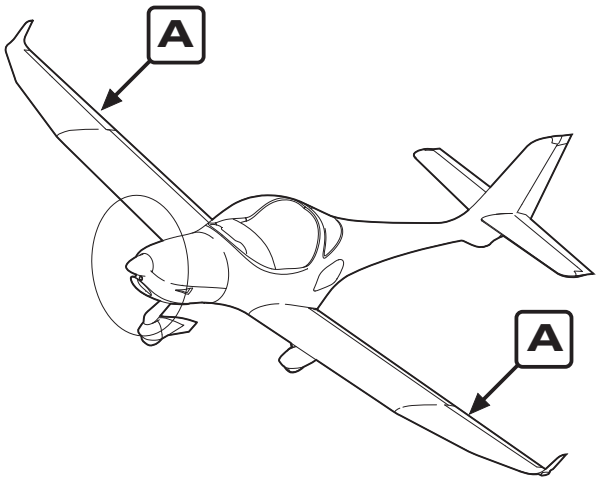

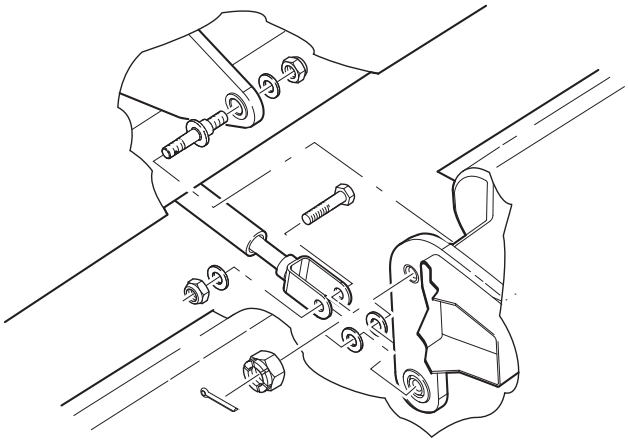

Detail-**A**

Aileron Installation
Figure 203

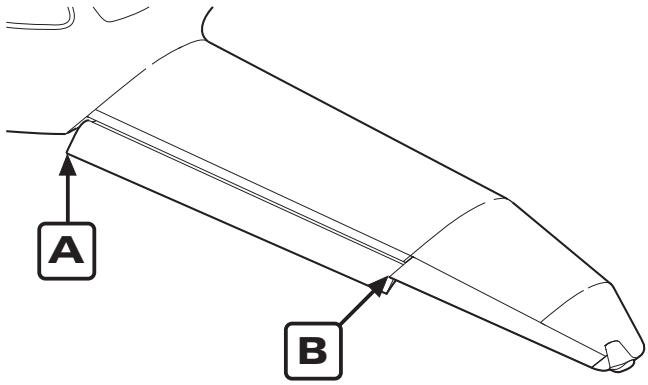

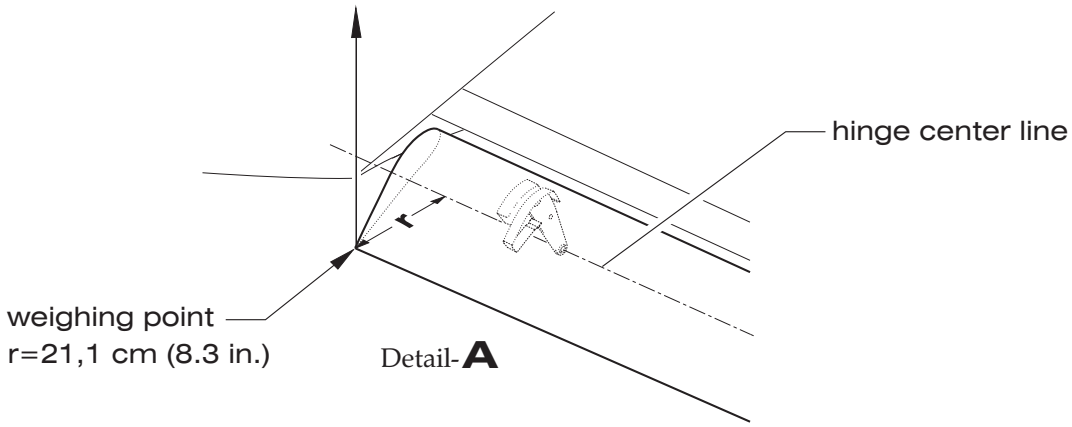

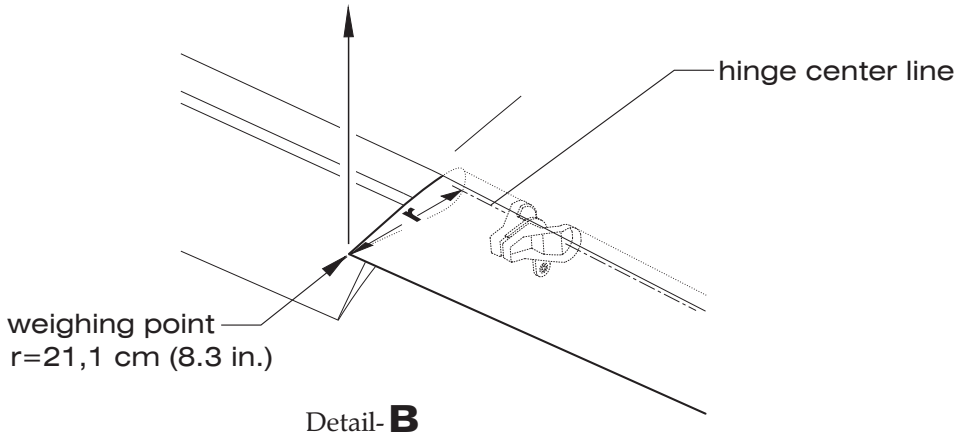

Flap / Aileron Balancing
Figure 204

(a) Attach spring balance at weighing point. The initial position of the flaps for each measurement should be 35° down.
(b) Raise the spring balance slowly until the control surface begins to move. Note the reading and the direction of the movement (i.e. 11,2 N up).
(c) Lower the spring balance slowly until the control surface begins to move. Note the reading and the direction of the movement to (i.e. 11,8 N down).

(3) Calculate the moments as described above. Both results must be within the permitted limits.