PILOT'S OPERATING HANDBOOK
and
FAA APPROVED AIRPLANE FLIGHT MANUAL

AQUILA A211 G

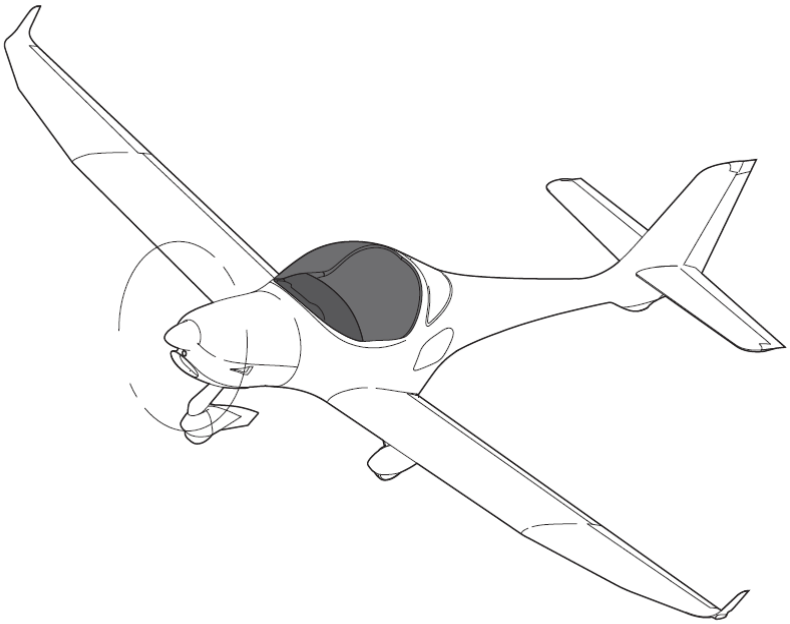

Model: **AQUILA AT01-100**

Serial Number: **AT01-100B-**

Registration: _____

Document Number: FM-AT01-1010-102

First Issue: 28.05.2013

Certified according to: JAR-VLA

This Pilot's Operating Handbook (POH) must be carried on board the aircraft at all times. The amendment history and revision status are provided in the list of effective pages and in the list of revisions.
The aircraft must be operated in compliance with the procedures and operating limits stated herein.

This manual constitutes the FAA Approved Airplane Flight Manual (AFM) for operation in the U.S. in accordance with FAR 21.29.

INTRODUCTION

With the AQUILA AT01 you have acquired a very efficient training and utility aircraft, which is easy to operate and exhibits excellent handling qualities.

To ensure reliable operation and trouble free flight, we recommend that you read this Pilot's Operating Handbook thoroughly and adhere to the operating instructions and recommendations given herein.

CAUTION

All limitations, procedures and performance data contained in this handbook are EASA/FAA approved and mandatory. Failing to follow the procedures and limits set forth in this handbook can lead to a loss of liability by the manufacturer.

THE HANDBOOK

The handbook is presented in loose-leaf form to ease the substitution of revisions and is sized in A5-format for convenient storage in the aircraft.
Tab dividers throughout the handbook allow quick reference to each section. A Table of Contents is located at the beginning of each section to aid the location of specific data within that section.

All rights reserved.
Reproduction or disclosure to third parties of this document or any part thereof is not permitted, except with the prior and express written permission of AQUILA Aviation International GmbH.

Copyright © by AQUILA Aviation International GmbH
Schönhagen, Germany

TABLE OF CONTENTS

	SECTION
GENERAL	1
OPERATING LIMITATIONS (approved section)	2
EMERGENCY PROCEDURES (approved section)	3
NORMAL PROCEDURES (approved section)	4
PERFORMANCE (partly approved section)	5
WEIGHT AND BALANCE	6
AIRCRAFT AND SYSTEMS DESCRIPTION	7
HANDLING AND MAINTENANCE	8
SUPPLEMENTS	9

LIST OF EFFECTIVE PAGES

Section	Issue	Approved	Page	Date
0	A.05		0-1 to 0-6	26.06.2017
1	A.02		1-1 to 1-12	15.10.2013
2	A.05	X	2-1 to 2-10	26.06.2017
3	A.05	X	3-1 to 3-18	26.06.2017
4	A.04	X	4-1 to 4-20	19.10.2015
5	A.05	(X)*	5-1 to 5-22	26.06.2017
6	A.02		6-1 to 6-14	15.10.2013
7	A.05		7-1 to 7-24	26.06.2017
8	A.02		8-1 to 8-6	15.10.2013
9	A.05		9-1 to 9-2	26.06.2017

* - partially approved

LIST OF REVISIONS

All revisions to the handbook, with the exception of individual weight and balance data and revisions to the Equipment List, must be recorded in the List of Revisions. Revisions must either be approved by EASA or, in the case of changes, in accordance with Part 21.A.263(c)(4) by the Design Organization of AQUILA Aviation International GmbH.
Additions and revisions to text in an existing section will be identified by a vertical black line adjacent to the applicable revised area. A new issue code appears in the footer of the revised pages.

If revisions are distributed, the applicable sections are to be exchanged with the updated version. Generally only complete sections of the POH will be exchanged, and not individual pages.

The operation of the AQUILA AT01 is only permitted with a current and up to date POH carried on board. Please refer to the following web page whenever the revision status of your POH is in question.

www.aquila-aviation.de

Issue	Description of Revision	Revised Section(s)	EASA Approval-number	Approval by AQUILA / EASA Date / Signature
A.01	First Issue	All	10045112	29.05.2013
A.02	Editorial changes, Supplements 8,33 kHz FAA certification	All		15.10.2013
A.03	AS-00 „Winter Operation“	0, 9		08.04.2014
A.04	Editorial changes	0, 4		19.10.2015
A.05	Minor changes, AS-21 “GTX 335 / 345”, SB-AT01-029 incorporated	0, 2, 3, 5, 7, 9		26.06.2017

Revision A.05 of AFM ref. FM-AT01-1010-102 is approved under the authority of DOA ref. EASA.21J.025.

26.06.17 AQUILA Head of Airworthiness DOA EASA.21J.025

Date, Signature Office of Airworthiness

Reporting of safety / airworthiness relevant occurrences:

Tel: ++49 (0)33731-707-0
Fax: ++49 (0)33731-707-11
E-Mail: occurrence@aquila-aviation.de

AVAILABILITY OF TECHNICAL PUBLICATIONS

To guarantee safe operation and correct maintenance of the AQUILA AT01-100 aircraft, all manuals and technical publications must be kept in the current effective status.
All manuals and technical publications relating to the aircraft AQUILA AT01-100 are available from the companies listed below:

(a) ***AQUILA AT01-100B related Manuals and Publications***

AQUILA Aviation International GmbH
OT Schönhagen, Flugplatz
D-14959 Trebbin

Tel: ++49 (0)33731-707-0
Fax: ++49 (0)33731-707-11
E-Mail: kontakt@aquila-aviation.de
Internet: http://www.aquila-aviation.de

(b) ***Engine ROTAX 912 S related Manuals and Publications***

Contact the ROTAX® authorized distributor for ROTAX® Aircraft Engines of the applicable distribution area.
For contact details of the local authorized distributor for ROTAX Aircraft Engines, please refer to chapter 13 of the ROTAX® Operator's Manual for 912 S Engines.

(c) ***Propeller MTV-21 related Manuals and Publications***

mt-Propeller Entwicklung GmbH
Flugplatz Straubing- Wallmühle
D-94348 Atting

Tel: ++49 (0)9429-9409-0
Fax: ++49 (0)9429-8432
Internet: www.mt-propeller.com
E-Mail: sales@mt-propeller.com

SECTION 1

GENERAL

		Page
1.1	INTRODUCTION	1-2
1.2	AIRCRAFT TYPE CERTIFICATION	1-2
1.3	WARNING, CATUIONS AND NOTES	1-3
1.4	PRINCIPLE AIRCRAFT DIMENSIONS	1-4
1.4.1	Overall Dimensions	1-4
1.4.2	Wings	1-4
1.4.3	Horizontal Stabilizer / Elevator	1-4
1.4.4	Fuselage and Vertical Stabilizer / Rudder	1-4
1.4.5	Landing Gear	1-4
1.5	AQUILA AT01-100 – THREE VIEW DRAWING	1-5
1.6	ENGINE	1-6
1.7	PROPELLER	1-6
1.8	FUEL	1-6
1.9	OIL AND COOLANT	1-7
1.9.1	Engine Oil	1-7
1.9.2	Engine Coolant	1-8
1.10	WEIGHT	1-8
1.11	TERMINOLOGY AND ABBREVIATIONS	1-9
1.12	CONVERSION FACTORS	1-12

1.1 INTRODUCTION

This Pilot's Operating Handbook contains all the information the pilot and instructor require for the safe and efficient operation of the AQUILA AT01-100 aircraft.

It includes all information required in accordance with JAR-VLA and additional information considered by the manufacturer to be of value to the pilot.

This Manual consists of nine sections which cover all operational aspects of the aircraft equipped with a Garmin G500 PFD.

Optional equipment which has been installed on request of the customer (COM, NAV, GPS and others) is included in Section 9 "Supplements" of this Manual.

Information regarding equipment approved for installation in the AQUILA AT01-100 is provided in Section 6 of this manual and in the approved equipment overview list in the Maintenance Manual (Document Number MM-AT01-1020-110).

This handbook includes the material required to be furnished to the pilot by the Federal Aviation Regulations and additional information provided by the manufacturer. It constitutes the FAA approved airplane flight manual.

1.2 AIRCRAFT TYPE CERTIFICATION

The aircraft AQUILA AT01 is type-certified in accordance with the certification specifications of the *Joint Aviation Requirements for Very Light Aeroplanes (JAR-VLA,* including the revision VLA/92/1) by the Luftfahrt-Bundesamt, the National Aviation Authority of Germany.
The Type Certificate under the Type Certificate Data Sheet No. 1106 was issued on the 21st of September 2001.

Category of Airworthiness: Normal

Noise Certification Basis: CS-36 (Amendment 3)

Approved for following operations: VFR by day

1.3 WARNING, CAUTIONS AND NOTES

Throughout the text, special text boxes marked WARNING, CAUTION and NOTE are used. These terms are defined as follows:

WARNING

Procedures, practices, etc. which may result in personal injury or loss of life if not strictly adhered to. The issues addressed under these text boxes directly affect the airworthiness and the safe operation of the aircraft.

CAUTION

Procedures, practices, etc. which may result in damage to or destruction of equipment if not strictly adhered to. The issues addressed under these text boxes have an indirect or minor impact on the airworthiness and the safe operation of the aircraft.

NOTE

Calls attention to additional procedures or information which are not directly associated with flight safety but are nevertheless important or deviate from standard practices.

1.4 PRINCIPLE AIRCRAFT DIMENSIONS

1.4.1 Overall Dimensions

Wing Span:	33.79 ft	(10.3 m)
Length:	24.28 ft	(7.4 m)
Height:	7.87 ft	(2.4 m)

1.4.2 Wings

Airfoil:	HQ-XX mod.	
Area:	113.02 sq. ft	(10.5 m²)
Aspect Ratio:	10,1	
Mean Aerodynamic Chord (MAC):	3.51 ft	(1.07 m)

1.4.3 Horizontal Stabilizer / Elevator

Area:	21.52 sq. ft	(2.0 m²)
Span:	9.84 ft	(3.0 m)

1.4.4 Fuselage and Vertical Stabilizer / Rudder

Maximum Fuselage Width	3.94 ft	(1.20 m)
Length	24.28 ft	(7.40 m)
Area (Vertical Tail):	14.39 sq. ft	(1.33 m²)

1.4.5 Landing Gear

Wheel Track:	6.37 ft	(1.94 m)
Wheel Base:	5.54 ft	(1.69 m)
Tire Size:	5.00-5	

1.5 AQUILA AT01-100 – THREE VIEW DRAWING

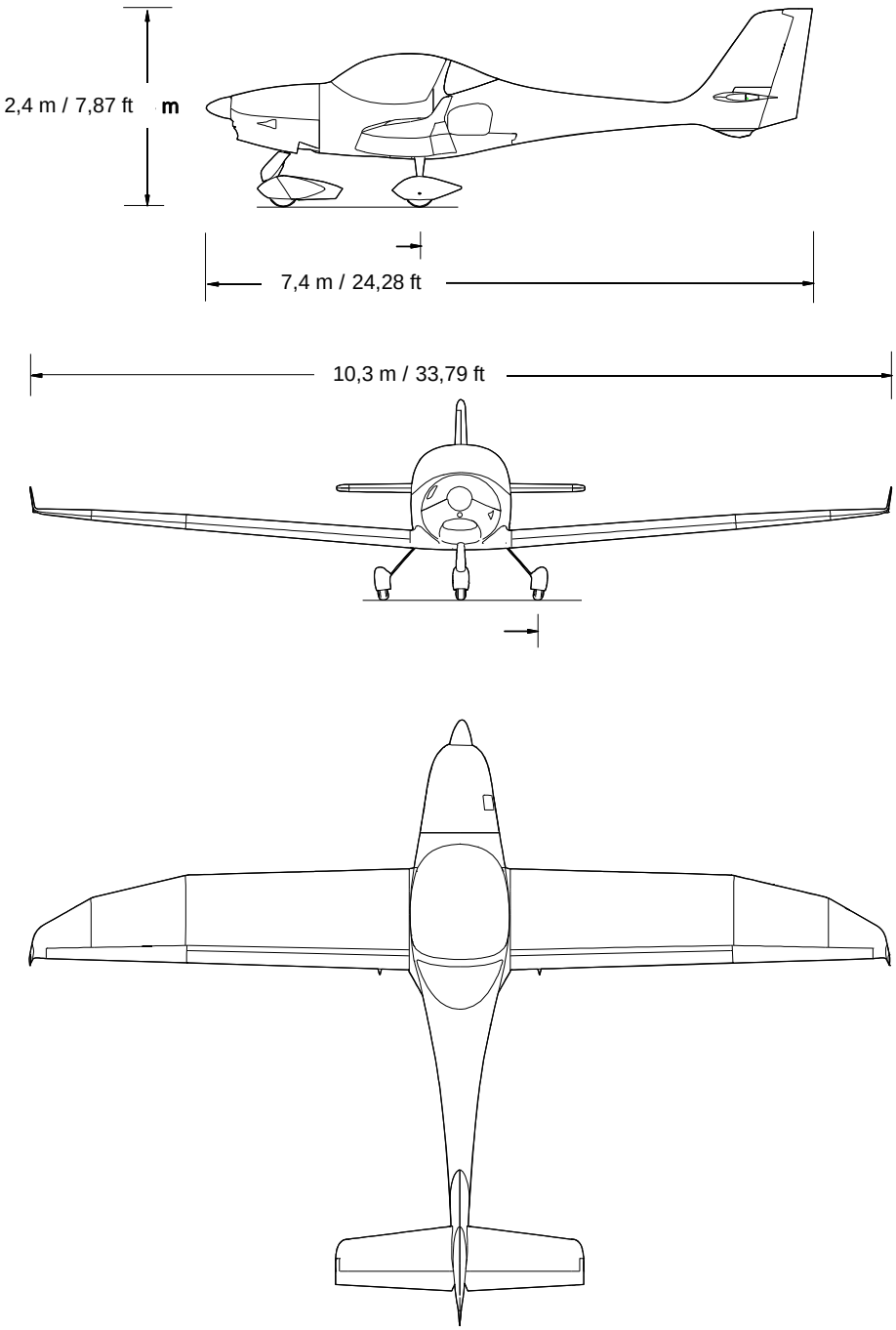

1.6 ENGINE

The ROTAX® 912 S3 is a 4-cylinder 4-stroke engine with air cooled cylinders and liquid cooled cylinder heads.
The Propeller is driven via an internal reduction gearbox with an integrated overload clutch and a hydraulic constant speed propeller governor.

Reduction Ratio of internal gearbox:	2.43 : 1	
Displacement:	82.5 in³	(1352 cm³)
max. Takeoff power (5 min.):	98.6 BHP	(73.5 kW)
at max. Takeoff propeller speed:	2385 RPM	
max. continuous power:	92.5 BHP	(69.0 kW)
at max. continuous propeller speed:	2260 RPM	

1.7 PROPELLER

Hydraulic two-blade, constant speed propeller

Manufacturer:	mt-Propeller	
Type:	MTV-21-A/170-05	
Diameter:	66.9 in	(170 cm)

1.8 FUEL

The following fuel grades are approved for use (min. RON 95):

EN228 Super	ASTM D4814
EN228 Super plus	
AVGAS 100LL	ASTM D910
AVGAS UL 91	ASTM D7547

	Left Fuel Tank	Right Fuel Tank
Fuel Capacity (total):	15.8 US gal (60 l)	15.8 US gal (60 l)
Usable Fuel (total):	14.48 US gal (54.8 l)	14.48 US gal (54.8 l)
Unusable Fuel:	1.37 US gal (5.2 l)	1.37 US gal (5.2 l)

Due to the higher lead content in AVGAS 100LL, wear of the valve seats, deposits in the combustion chamber and lead sediments in the lubrication system will increase when using this type of fuel. Therefore AVGAS should only be used if you encounter problems with vapor lock or if the other fuel types are not available.

Lead free AVGAS UL 91 is similar to AVGAS 100LL (MON 91 ⇒ RON > 95) when it comes to vapor lock susceptibility. However, it does not suffer from lead induced problems.
(Please refer to the current issue of the operating manual for the ROTAX® 912 engine series)

1.9 ENGINE OIL AND COOLANT

1.9.1 Engine Oil

Use only oil with an API classification of “SG” or higher. Heavy duty 4-stroke motor oils tend to meet these requirements. For more information regarding engine oil selection, please refer to the Operator’s Manual for all versions of the 912 engine series, section 10.2.3, and to the current issue of the ROTAX® Service Instruction SI-912-016.

The following chart shows the recommended oil viscosity as a function of the climatic conditions. The use of multi-grade oils is recommended.

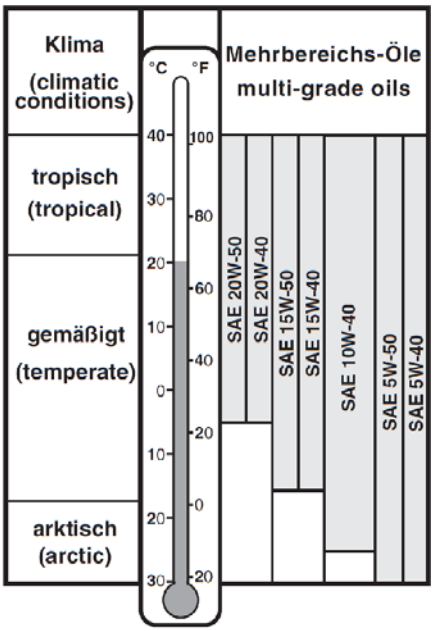

Figure 1-2

CAUTION

Do <u>not</u> use aviation grade oil!

*When operating the engine with AVGAS do **<u>not</u>** use full synthetic oil!*
If the engine is operated extensively on AVGAS 100LL (more than 30hrs within 100hrs) the interval between oil changes shall be reduced to 50 hrs!
(please refer to the current issue of the ROTAX® Service Instructions SI-912-016)

Max. Oil Capacity:	3.17 US quarts	(3.00 l)
Difference between Max/Min:	0.475 US quarts	(0.45 l)
Max. Oil Consumption:	0.063 US quarts/hr.	(0.06 l/h)

1.9.2 Engine Coolant

A conventional, ethylene glycol and water based coolant is used.

Please refer to the Operator's Manual for the 912 engine series, section 10.2.3, and to the current issue of the ROTAX® Service Instructions SI-912-016 when choosing an engine coolant.

Description	Ethylenglycol	Water
Mixture ratio [%] anti-freeze / water	50 + 15	50 - 15

CAUTION

Low quality or contaminated coolant may lead to deposits in the cooling system which may result in insufficient engine cooling.

Coolant Quantity:	Minimum:	2.54 US quarts	(2.4 l)
	Maximum:	2.64 US quarts	(2.5 l)
Overflow Bottle:	Minimum:	0.106 US quarts	(0.1 l)
	Maximum:	0.21 US quarts	(0.2 l)

1.10 WEIGHTS

Maximum Takeoff Weight (MTOW):	1653 lb.	(750 kg)
Maximum Landing Weight (MLW):	1653 lb.	(750 kg)
Empty Weight (MZFW):	Refer to section 6	
Max. Weight in Baggage Compartment:	88.2 lb.	(40 kg)
(All baggage must be adequately strapped and secured)		
Max. Wing Loading:	14.6 lb./ft²	(71.4 kg/m²)
Min. Wing Loading:	ca. 10.77 lb./ft²	(52.6 kg/m²))

1.11 TERMINOLOGY AND ABBREVIATIONS

1.11.1 Speeds

IAS: (Indicated Airspeed) - the speed shown on the airspeed indicator

KIAS: IAS expressed in knots

CAS: (Calibrated Airspeed) - the indicated airspeed, corrected for position and instrument error. CAS is equal to true airspeed in standard atmosphere conditions at sea level.

KCAS: CAS expressed in knots

TAS: (True Airspeed) - the airspeed relative to undisturbed air, which is the CAS corrected for altitude, temperature and compressibility.

GS: (Ground speed) - speed of the aircraft relative to the ground

V_A: Maneuvering Speed

V_S: Stall speed without engine power

V_{S0}: Stall speed without engine power in the landing configuration

V_X: Best Angle-of-Climb Speed

V_Y: Best Rate-of-Climb Speed

V_{FE}: Maximum Flap Extended Speed

V_{NE}: Never Exceed Speed - The speed limit that must not be exceeded at any time

V_{NO}: Maximum Structural Cruising Speed is the speed that should not be exceeded except in smooth air and then only with caution.

1.11.2 Weight and Balance

Reference Datum:	An imaginary vertical plane from which all horizontal distances are measured for balance purposes
Reference Line:	fixed horizontal reference line
Lever Arm:	The horizontal distance from the reference datum to the center of gravity (C.G.) of an item
Moment:	The product of the weight of an item multiplied by its lever arm
Empty Weight:	Weight of the aircraft including unusable fuel, full operating liquids and full oil.
Max. Takeoff Weight:	Maximum permissible weight approved for the conduction of the takeoff run
Useful Load:	Difference between takeoff weight and basic empty weight
Usable Fuel:	Fuel available for flight planning
Unusable fuel:	Fuel remaining in the fuel tanks that cannot be safely used in flight.
Center of Gravity (C.G.):	The point at which the aircraft would balance if it were possible to suspend it at that point
MAC:	mean aerodynamic chord
MTOW:	maximum takeoff weight
MWL:	maximum landing weight
MZFW:	empty weight

1.11.3 Meteorological Terminology

OAT:	Outside Air Temperature
VFR, Day	Day: (SR) Sunrise - 30min to (SS) Sunset + 30min
VFR, Night	Night: (SS) Sunset + 30 min to (SR) Sunrise – 30min
DVFR:	Flight during the day according to visual flight rules
NVFR:	Flight during the night according to visual flight rules
MSL:	Altitude above sea level
QNH:	Barometric pressure adjusted to sea level
ISA:	International Standard Atmosphere

1.11.4 Engine and Performance

TOP:	(Take-off Power) - maximum power permissible for takeoff
MCP:	(Max. Continuous Power) - maximum power permitted for continuous operation

1.11.5 Various

Serial No. (S/N):	Serial Number of the Aircraft
Part No. (P/N):	Part Number
GFRP:	Glass Fiber Reinforced Plastic
CFRP:	Carbon Fiber Reinforced Plastic
ACL:	Anti Collision light
VFR:	Visual Flight Rules
PFD:	Primary Flight Display
ADC	Air-Data Computer
AHRS	Attitude and Heading Reference System
GDU	Garmin Display Unit
MFD	Multi-Function Display
AI	Attitude Indicator or Artificial Horizon
LDG:	Flaps - landing position
T/O:	Flaps - takeoff position
UP:	Flaps - cruise position
MP:	Manifold Pressure
COM:	Communication
NAV:	Navigation
CB:	Circuit Breaker
ATC:	Air Traffic Control
FF:	Fuel Flow
rpm:	revolutions per minute
AS:	AQUILA Supplement

1.12 CONVERSION FACTORS

1.12.1 Length

1 ft	=	0.304	m
1 in	=	25.4	mm

1.12.2 Speed

1 kt	=	1.852	km/h
1 mph	=	1.609	km/h

1.12.3 Pressure

1 hPa	=	100	N/m²	=	1 mbar
1 in. Hg	=	33.865	hPa		
1 psi	=	68.97	mbar		

1.12.4 Mass (“Weight”)

1 lb	=	0.454	kg

1.12.5 Volume

1 US Gallon	=	3.78	Liter
1 Imperial Gallon	=	4,546	Liter

1.12.6 Temperature

(t) °C (Celsius)	=	5/9 ((t) °F-32)
(t) °F (Fahrenheit)	=	9/5 (t) °C+32

SECTION 2

LIMITATIONS

		Page
2.1	INTRODUCTION	2-2
2.2	AIRSPEED LIMITATIONS	2-2
2.3	AIRSPEED INDICATOR MARKINGS	2-3
2.4	POWER PLANT LIMITATIONS	2-3
2.4.1 2.4.2	Engine Propeller	2-3 2-4
2.5	POWER PLANT INSTRUMENT MARKINGS	2-5
2.6	OTHER INSTRUMENT MARKINGS	2-5
2.7	WEIGHT LIMITS	2-6
2.8	CENTER OF GRAVITY LIMITS	2-6
2.9	MANEUVER LIMITS	2-6
2.10	FLIGHT LOAD FACTORS	2-7
2.11	CREW	2-7
2.12	KINDS OF OPERATION LIMITS / MINIMUM EQUIPMENT	2-8
2.13	FUEL LIMITATIONS	2-9
2.14	TEMPERATURE LIMITATIONS	2-9
2.15	OPERATING ALTITUDE	2-9
2.16	PLACARDS	2-10

2.1 INTRODUCTION

This section includes all operating limitations, instrument markings and basic placards necessary for the safe operation of the aircraft, its engine, standard systems and standard equipment.

WARNING

The aircraft must be operated in compliance with the operating limitations.

The GARMIN G500 Cockpit Reference Guide must be carried on board the aircraft and be accessible to the crew during flight.

2.2 AIRSPEED LIMITATIONS

The airspeeds given below are expressed in Indicated Airspeeds (IAS), the airspeed shown on the airspeed indicator:

Indicated Airspeed (IAS)	[kts]	Remarks
V_A Maneuvering speed	**112**	Do not make full or abrupt control movements above this speed. This may result in overloading the aircraft structure.
V_{FE} Maximum flap extended speed	**90**	Do not exceed this speed with flaps in T/O or LDG position.
V_{NO} Maximum structural cruising speed	**130**	Do not exceed this speed except in smooth air, and then only with caution.
V_{NE} Never exceed speed	**165**	Do not exceed this speed in any operational condition.

2.3 AIRSPEED INDICATOR MARKINGS

The airspeeds given below are expressed in Indicated Airspeeds (IAS):

Marking (IAS)	[kts]	Remarks
White arc	**39-90**	Full flap operating range
Green arc	**49-130**	Normal operating range
Yellow arc	**130-165**	Operations in this region must be conducted with caution and only in smooth air.
Red line	**165**	Maximum speed for all operations.

2.4 POWER PLANT LIMITATIONS

2.4.1 Engine

a) Manufacturer: BRP-ROTAX GmbH & Co KG, Gunskirchen, Austria

b) Model: 912 S3

NOTE

The engine is equipped with a hydraulic propeller governor and drives the propeller via a reduction gearbox. The gearbox reduction ratio is 2.43 : 1.
The tachometer indicates the propeller speed. As a result, all rpm readings in this manual are expressed as propeller speeds, unlike the data in the Engine Operator's Manual.

c) Power Plant Limitations

Maximum Takeoff Power:	98.6	BHP	(73.5 kW)
Maximum Takeoff Prop Speed (5 min.):	2385	RPM	
Maximum Continuous Power:	92.5	BHP	(69.0 kW)
Maximum Continuous Prop Speed:	2260	RPM	

d) Oil Pressure

Minimum:	11.6 psi	(0.8 bar)	below 590 RPM
Normal:	29 –72.5 psi	(2.0-5.0 bar)	above 590 RPM
Maximum during a cold start: (only for a short time)	101.5 psi	(7.0 bar)	

e) Fuel Pressure

Minimum: red warning light

f) Oil Temperature

Maximum:	266 °F	(130 °C)
Minimum:	122 °F	(50 °C)

g) Cylinder Head Temperature (CHT)

Maximum: 248 / 264** °F (120 / 129**) °C

h) Minimum temperature to start the engine

Minimum: -13 °F (-25 °C)

At an OAT below -13 °F (-25 °C) the engine must be preheated.

2.4.2 Propeller

a) Manufacturer: mt-Propeller Entwicklung GmbH, Atting, Germany

b) Model: MTV-21-A/170-05

c) Propeller diameter: (66.9 in) 1,70 m

d) Propeller speed limitations

Maximum take-off propeller speed (max. 5 min): 2385 RPM

Maximum continuous propeller speed: 2260 RPM

** old type of cylinder head at cylinder no. 3 (see SB-AT01-029)

2.5 MARKINGS ON POWER PLANT INSTRUMENTS

The following table shows the instrument markings on the power plants and their meaning.

Instrument	**Red Line** (minimum)	**Green Arc** (normal operating range)	**Yellow Arc** (caution)	**Red Line** (maximum)
Tachometer [RPM]	---	535 – 2260	2260 - 2385	2385
Oil Temperature [°F] ([°C])	122 (50)	122-266 (50 – 130)	---	266 (130)
Cylinder Head Temperature [°F] ([°C])	---	---	---	248 / 264** (120 / 129**)
Oil Pressure [psi] ([bar[)	11.6 (0.8)	29 – 72.5 (2.0 – 5.0)	11.6 – 29 (0.8 – 2.0) 72.5 – 101.5 (5.0 – 7.0)	101.5 (7.0)

** old type of cylinder head at cylinder no. 3 (see SB-AT01-029)

2.6 MARKINGS ON OTHER INSTRUMENTS

Instrument	**Red Arc** (minimum)	**Green / Red or Yellow Arc** (caution)	**Green Arc** (normal operating range)	**Red Arc** (maximum)
Voltmeter [V]	8 – 11	11 – 12	12 – 15	15 – 16
Amperemeter [A]	---	---	---	---

2.7 WEIGHT LIMITS

Maximum Takeoff Weight	1653 lb	(750 kg)
Maximum Landing Weight	1653 lb	(750 kg)
Max. Weight in Baggage Compartment	88.2 lb	(40 kg)

WARNING

Exceeding the weight limits can overload the aircraft and is prohibited. In addition, aircraft performance and handling characteristics may be detrimentally affected. The stall speed will increase, so that the instrument markings are no longer accurate.

2.8 CENTER OF GRAVITY LIMITS

The reference datum is located at the wing leading edge, at the fuselage-wing junction.
With the aircraft leveled, the reference datum and the vertical fall in a plane.

The center of gravity must be within the following limits:

Forward Limit:	16.8 in.	(0.427 m)	aft of Datum
Rearward Limit:	20.6 in.	(0.523 m)	aft of Datum

WARNING

Exceeding the center of gravity limits is prohibited. Exceeding the limits reduces the controllability and stability of the aircraft.

The procedure to determine the center of gravity location for flight is provided in Section 6 of this handbook.

2.9 MANEUVER LIMITS

The aircraft is certificated in accordance to the JAR-VLA. That certification includes the following maneuvers:

a)	All normal, non acrobatic maneuvers.		
b)	Stalls:	Wings level stall	
c)	Steep Turns:	Angle of Bank ≤ 60°	
d)	Chandelle:	Entry Speed	120 kts
e)	Lazy Eight:	Entry Speed	110 kts

NOTE

All acrobatic maneuvers as well as maneuvers with a bank angle exceeding 60° are prohibited.

2.10 FLIGHT LOAD FACTORS

The following flight load factors may not be exceeded while performing any approved maneuvers.

Flight Load Factor [g]	at V_A	at V_{NE}	With Flaps Extended
Positive	4.0	4.0	2.0
Negative	-2.0	-2.0	0

WARNING

Exceeding the flight load factors limits may result in damage to the aircraft structure.

CAUTION

Maneuvers that include intentional negative flight load factors are not permitted.

Intentional Spinning is not permitted.

2.11 CREW

Maximum number of people on board: 2

Minimum crew: 1 Pilot
With only one person on board, the aircraft may only be operated from the left seat

2.12 KINDS OF OPERATION LIMITS / MINIMUM EQUIPMENT

Certified for: visual flights by Day

Table 1	For VFR by Day*
Flight and navigational instruments	• Garmin G-500 • Magnetic Compass • Working timepiece with a seconds hand** • VHF Transceiver*** • GPS Receiver Garmin 400W / 500W Series or GTN (6XX/7XX) • Speed Indicator****
Power Plant Instruments	• Fuel gauge • Oil Temperature Indicator • Warning Light FUEL • Oil Pressure Indicator • Cylinder Head Temperature Indicator • Manifold Pressure Gauge • Amperemeter • Tachometer • Voltmeter • Warning Light ALT 1
Other Equipment	• Seat belts for each occupied seat • Emergency Hammer

* The minimum equipment listed in Table 1 is valid for Germany. Other countries may require different minimum equipment. This may depend on the type of flight being carried out and the route being flown.

** In Germany a watch with a seconds hand may be used as a working timepiece. Please observe all differing national regulations.

*** In Germany a VHF Transceiver is not required for flights that do not leave the vicinity of an uncontrolled airfield (§3a Abs. 3 d. Luftverkehrs-Ordnung). Regulations of other nations must still be observed (§ 21a Abs. 1 der Luftverkehrs-Ordnung).

**** Valid only for FAA registered aircrafts

NOTE

For specific operations, additional equipment may be necessary. It is the aircraft operator's responsibility to observe the applicable requirements.

2.13 FUEL LIMITATIONS

	Left Fuel Tank	Right Fuel Tank
Fuel capacity (total):	15.85 US gal (60.0 l)	15.85 US gal (60.0 l)
Usable fuel (total):	14.48 US gal (54.8 l)	14.48 US gal (54.8 l)
Unusable fuel:	1.37 US gal (5.2 l)	1.37 US gal (5.2 l)

For approved fuel grades, please refer to paragraph 1.8.

NOTE

The amount of unusable fuel was determined with flap on LDG and V_{FE} = 90 kts. It is the worst case fuel supply configuration within section 4 "NORMAL PROCEDURES".

NOTE

The fuel quantity, fuel used and fuel remaining functions of the G500 are advisory information only and must be verified by the pilot.

2.14 TEMPERATURE LIMITATIONS

Parts of the aircraft structure that are exposed to direct vertical sunlight must be painted WHITE.

2.15 OPERATING ALTITUDE

The Aquila AT01-100 has a maximum operating altitude of 14,500 ft.

2.16 PLACARDS

1) On the instrument panel, in the lower middle section of the panel:

This aircraft is certified according to JAR-VLA for day VFR operations under non-icing conditions. All aerobatic maneuvers, including spins, are prohibited. For further operating limitations refer to the POH.

2) On the instrument panel below the Airspeed Indicator:

MANEUVERING SPEED
V_A = 112 KIAS

3) On the inner surface of the baggage compartment door:

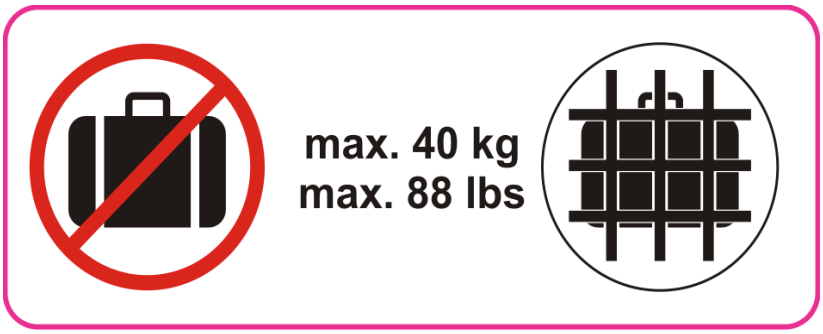

SECTION 3

EMERGENCY PROCEDURES

		Page
3.1	INTRODUCTION	3-3
3.1.1	Resetting circuit-breakers	3-3
3.2	AIRSPEEDS FOR EMERGENCY OPERATION	3-3
3.3	ENGINE FAILURES – CHECKLISTS	3-4
3.3.1	Engine Failure During the Take-off Run	3-4
3.3.2	Engine Failure Immediately After Take-off	3-4
3.3.3	In-flight Engine Failure	3-5
3.4	FORCED LANDINGS	3-7
3.4.1	Precautionary Landing	3-7
3.4.2	Emergency Landing	3-8
3.5	SMOKE AND FIRE	3-8
3.5.1	Engine Fire on the Ground	3-8
3.5.2	Engine Fire in Flight	3-9
3.5.3	Electrical Fire with Smoke on the Ground	3-9
3.5.4	Electrical Fire with Smoke in Flight	3-9
3.6	INADVERTENT FLIGHT INTO ICING CONDITIONS	3-10
3.7	SPIN RECOVERY PROCEDURE	3-10
3.8	POWER-OFF GLIDE	3-11
3.9	LANDING WITH A FLAT TIRE	3-11
3.10	ELECTRICAL SYSTEM MALFUNCTIONS	3-12
3.10.1	Complete Electrical System Failure	3-12
3.10.2	Alternator Failure (ALT 1)	3-12
3.10.3	Low Voltage Indication	3-13
3.11	FLAP CONTROL SYSTEM MALFUNCTIONS	3-14

3.12	TRIM CONTROL SYSTEM FAILURES	3-14
3.12.1	Trim System Inoperative	3-14
3.12.2	Trim Actuator Runaway	3-15
3.13	AVIONICS MALFUNCTIONS	3-15
3.13.1	Complete Avionics Failure	3-15
3.13.2	Receive Mode Failure of COM-Equipment	3-15
3.13.3	Transmit Mode Failure of COM-Equipment	3-15
3.13.4	Primary Flight Display Failure	3-16
3.13.5	Magnetometer Failure	3-16
3.13.6	Complete Navigation System Failure	3-16
3.13.7	AHRS Failure	3-17
3.13.8	ADC Failure	3-17
3.14	STARTER MALFUNCTION	3-17
3.15	IN-FLIGHT FAILURES AND MALFUNCTIONS	3-17
3.15.1	Inadvertent Release and Opening of the Canopy in flight	3-17

3.1 INTRODUCTION

This section provides checklists with the recommended procedures for coping with various emergency situations.
Emergencies caused by aircraft or engine malfunctions are extremely rare if all pre-flight inspections and required maintenance is properly conducted.
However, should an emergency situation occur, the procedures provided here are recommended to correct the problem and master the situation.

Not all types of emergency situations or combinations can be described in the POH. A pilot must therefore always use good airmanship and have a sound knowledge of the aircraft and its systems.

3.1.1 Resetting Circuit-breakers

The **one time only** resetting of a tripped circuit breaker or safety switch is considered a recommendation for the following emergency procedures.

Applicable for all switches: pushing the top = ON; pushing the bottom = OFF

CAUTION

A tripped circuit breaker or safety switch should only be reset if it is needed for continued safe flight and landing. In extreme cases, resetting a circuit breaker may cause an electrical fire.

*A circuit breaker or safety switch should only be reset **once** and be inspected after flight.*

3.2 AIRSPEEDS FOR EMERGENCY OPERATION

Airspeed (IAS)		[kts]
Maneuvering speed	V_A	112
Speed for best glide ratio		
Flaps	UP	78
Flaps	T/O	73
Precautionary landing with / without engine power		
Flaps	LDG	60
Landing without engine power		
Flaps	T/O	65
Flaps	UP	70

3.3 ENGINE FAILURES – CHECKLISTS

3.3.1 Engine Failure before Take-off

1.	Throttle	IDLE
2.	Brakes	APPLY as required

3.3.2 Engine Failure Immediately After Take-off and during Climb

1.	Airspeed (IAS)	70 KIAS

WARNING

Depending on the own speed and altitude, the wind condition and the remaining engine power a forced landing must be initiated under consideration of the local conditions.

Turning back to the runway only at adequate altitude, otherwise land straight ahead ! Pay attention to the speed !

Check the following items (if time allows):

2.	Fuel selector valve	SWITCH to fullest or other tank
3.	**Fuel Pump** switch	ON
4.	Ignition switch	BOTH
5.	Throttle	wide OPEN
6.	Propeller control lever	START position
7.	Choke	PRESS (OFF)
8.	Carburetor heat	PULL (ON)

Before landing (if possible):

9.	Fuel selector valve	OFF
10.	Ignition switch	OFF
11.	**ALT1 / BAT** switch	OFF

WARNING

*With **BAT** switch in OFF position: Stall warning system inoperative and flap position cannot be changed !*

3.3.3 In-flight Engine Failures

A) <u>ENGINE ROUGHNESS</u>

1. Carburetor heat	PULL (ON)
2. **Fuel Pump** switch	ON
3. Ignition switch	SWITCH through the positions L-BOTH, then R-BOTH
4. Throttle	Maintain setting

If roughness continues:

5. Throttle	REDUCE to min. required for flight
6. Precautionary Landing	PERFORM (see 3.4.1)

B) <u>LOSS OF OIL PRESSURE</u>

1. Oil Temperature	CHECK

If oil pressure sinks below the green range and the oil temperature remains normal:

2. Land at the nearest airfield

If oil pressure sinks below the green range and the oil temperature rises:

2. Throttle	REDUCE to min. required for flight
3. Precautionary landing	PERFORM, Engine may fail suddenly!

C) <u>LOSS OF FUEL PRESSURE</u>

1. **Fuel Pump** switch	ON
2. Fuel selector valve	SWITCH to fullest or other tank
3. **Fuel Pump** switch	OFF, when warning light **FUEL** turns off

NOTE

After switching fuel tanks, it may take up to 8 seconds for full fuel pressure to be built up.

4. If warning light **FUEL** remains alight:

Land at the nearest airfield
Engine may fail suddenly!

D) <u>ENGINE RESTART PROCEDURE WITH STOPPED PROPELLER</u>

1.	Non-essential electrical equipment		OFF
2.	**ALT1 / BAT** switch		ON
3.	Propeller control lever		START position
4.	Fuel selector valve		SWITCH to fullest tank
5.	**Fuel Pump** switch		ON
6.	Throttle	warm engine	OPENED 2 cm
		cold engine	IDLE
7.	Choke	warm engine	PUSHED (OFF)
		cold engine	PULL (ON)
8.	Ignition switch		BOTH, then START

When power is restored:

9.	Oil pressure	CHECK
10.	Choke	PUSHED (OFF)
11.	Electrical equipment	SWITCH ON (as required)
12.	Oil temperature	CHECK

NOTE

The engine can also be restarted by Windmilling if the airspeed is increased to approx. 120 kts. Approx. 1000 ft / 300 m of altitude is required in this method.

E) <u>ENGINE RESTART PROCEDURE WITH WINDMILLING PROPELLER</u>

At airspeeds above 60 kts the propeller continues to windmill with the engine off.

1.	Airspeed		78 KIAS
2.	**ALT1 / BAT** switch		ON
3.	Fuel selector valve		SWITCH to fullest or other tank
4.	Propeller control lever		START position
5.	**Fuel Pump** switch		ON
6.	Ignition switch		BOTH
7.	Throttle	hot engine	OPENED 2 cm (0,8 inch)
		cold engine	IDLE
8.	Choke	hot engine	PUSHED (OFF)
		cold engine	PULL (ON)

When power is restored:

9.	Oil pressure	CHECK
10.	Choke	PUSHED (OFF)
11.	Electrical equipment	SWITCH ON (as required)
12.	Oil temperature	CHECK

3.4 FORCED LANDINGS

Generally the flight path should always be chosen such that, in the event of an emergency, a suitable landing field can be reached.

CAUTION

If, after a forced landing, the aircraft flips over, an emergency hammer can be used to break through the canopy. For this purpose an emergency hammer is attached to back of the right hand seat.

3.4.1 Precautionary Landing

NOTE

A precautionary landing occurs when the pilot decides to discontinue flight to avoid a situation degrading into an emergency. This way the pilot has time to make decisions and choose an adequate landing site or divert to an airfield. The procedure for a precautionary landing is fundamentally the same as a normal landing, which is described in Section 4.
The choice of the landing field is here of particular importance.
Deteriorating weather is a leading cause of precautionary landings.

1.	Locate Suitable Field	CONSIDER wind direction, terrain and obstructions.
2.	Seat Belts and Harnesses	TIGHT
3.	Initiate descent	

4. If possible: Overfly landing site at a low altitude and inspect (wind direction, terrain and obstructions)
5. Abeam the touchdown point:

Throttle	AS REQUIRED
Propeller Control Lever	START position
Carburetor Heat	PUSHED (OFF)
Fuel Pump switch	ON
Flaps	LDG
Airspeed	60 KIAS

6. Touch down with lowest possible airspeed.
7. After touchdown:

Brakes	APPLY as required
Fuel selector valve	OFF
Ignition switch	OFF
ALT1 / BAT switch	OFF

3.4.2 Emergency Landing

NOTE

An emergency landing occurs in a state of distress, such as an engine failure, fuel starvation or mechanical problems with the aircraft. In this case a pilot typically has significantly less time to choose a landing site compared with a precautionary landing.

1. Airspeed:

Flaps in LDG position	60 KIAS
Flaps in T/O position	65 KIAS
Flaps in UP position	70 KIAS

2. Fuel selector valve — OFF
3. Ignition switch — OFF
4. Seat belts and harnesses — TIGHT
5. COM (ATC) — REPORT location and intention
6. **ALT1 / BAT** switch — OFF

WARNING

*With **ALT1/BAT** switch OFF:*
- ⇨ *Stall warning inoperative*
- ⇨ *Flap position cannot be changed*

3.5 SMOKE AND FIRE

3.5.1 Engine Fire on the Ground

1. Fuel selector valve — OFF
2. Throttle — WIDE OPEN
3. **ALT1 / BAT** switch — OFF
4. Ignition switch — OFF
5. Aircraft — EVACUATE immediately once engine stops

3.5.2 Engine Fire In-flight

1.	Throttle	WIDE OPEN
2.	Fuel selector valve	OFF
3.	Cabin heat	PUSHED (OFF)
4.	Canopy slide-window	OPEN
5.	Perform a precautionary landing without engine power as described in Section 3.4.2	

3.5.3 Electrical Fire with Smoke on the Ground

1.	**ALT1 / BAT** switch	OFF

If engine is running:

2.	Throttle	IDLE
3.	Fuel selector valve	OFF
4.	Ignition switch	OFF
5.	Canopy	OPEN
6.	Fire extinguisher (if installed)	USE as required

3.5.4 Electrical Fire with Smoke in Flight

1.	**ALT1 / BAT** switch	OFF
2.	**Avionics** switch	OFF
3.	All switches (except Ignition)	OFF
4.	Cabin ventilation and canopy slide-window	OPEN
5.	Fire extinguisher (if installed)	Use only if smoke persists
6.	Land immediately	Refer to Section 3.4 Forced Landings

After landing and aircraft comes to a halt:

7.	Engine	Shut down
8.	Canopy	OPEN
9.	After engine stops	Evacuate aircraft

CAUTION

When a large amount of smoke is present or the fire extinguisher has been used, ventilate the cabin by unlocking the canopy latch. If possible, the fire extinguisher should be secured after use.

WARNING

*Turning the **ALT1 / BAT** switch OFF turns off all electrical and electronic equipment, including the flaps*

3.6 INADVERTENT FLIGHT IN ICING CONDITIONS

WARNING

Intentional flight in icing conditions is prohibited. During unintentional flight in icing conditions proceed as follows:

1.	Carburetor heat	PULL (ON)
2.	Leave icing conditions immediately by flying a reciprocal heading and/or changing altitude	
3.	**P/S Heat** switch (if installed)	ON
4.	Propeller Control Lever	START position
5.	Cabin heat	PULL (ON)
6.	Move the control surfaces periodically to keep them from freezing	

CAUTION

The stall speed increases with ice accumulation on the wing leading edge.

Airspeed indicator, altimeter and vertical speed indicator readings may be inaccurate with ice accumulation on the leading edge of the wing. Additionally, the stall warning system may be inoperative or may not work correctly.

3.7 SPIN RECOVERY PROCEDURE

1.	Rudder	Full deflection opposite direction of rotation
2.	Elevator	Neutral or slightly forward
3.	Aileron	Neutral
4.	Throttle	IDLE
5.	Flaps	UP
6.	Rudder	Neutral when rotation stops
7.	Elevator	Carefully ease out of dive

Make a smooth recovery from the dive to regain level flight attitude. Do not exceed V_{NE}.

WARNING

During spin recovery, adherence to the recovery sequence is essential!

3.8 POWER-OFF GLIDE

Achievable gliding distances vary depending on altitude and current wind conditions. This is very important when choosing a landing site or reaching a near-by airfield.

To achieve maximum gliding distance:

1.	Flaps	UP
2.	Airspeed	78 KIAS
3.	Demonstrated glide ratio	14 This means approx. 2.3 NM can be covered for every 1000 ft of altitude (no wind)

NOTE

Headwinds, tailwinds and wing contamination can significantly influence the distance achievable in glide.

3.9 LANDING WITH A FLAT TIRE

When landing with a defective tire, or this is suspected, proceed as follows:

1. Flaps — LDG position
2. Perform touch down on the side of the runway opposite the defective tire. This allows the use of the entire runway width to correct any directional changes caused by the defective tire. (for example: left tire defective, land on the right side of the runway)
3. Perform touch down with the undamaged main tire first. Lower nose wheel as quickly as possible to improve controllability on the ground.
4. Roll out with full aileron deflection in the direction of the undamaged main tire. This reduces the load on the damaged tire.
5. When landing with a defective or damaged nose wheel:
   Touch down with minimum speed.
   Keep nose wheel off the ground as long as possible.

3.10 ELECTRICAL SYSTEM MALFUNCTIONS

3.10.1 Complete Electrical System Failure

1. **ALT1 / BAT** switch	CHECK if ON
2. **BAT1** circuit breaker *(see 3.1.1)*	RESET if tripped
3. **ALT1** circuit breaker *(see 3.1.1)*	RESET if tripped

If power cannot be restored, it is recommended to carry out a precautionary landing at the nearest airfield.

3.10.2 Alternator Failure (ALT1)

ALT1 warning light illuminates

1. **ALT1** switch	SWITCH OFF then ON, approx. 10 sec. interval
2. **ALT1** circuit breaker *(see 3.1.1)*	RESET if tripped

If **ALT1** warning light remains illuminated:

3. **ALT1** circuit breaker	PULL
4. **ALT1** SWITCH	OFF

5. Instruments not required for the safe continuation of flight should be turned off or dimmed to at least half the intensity.
6. Monitor the voltmeter and ammeter
7. Land at the nearest airfield.

NOTE

A fully charged and properly serviced battery will be able to supply power to all essential systems for approx. 30 minutes.
Even with the audio panel turned off the pilot can still transmit with COM 1 (Failsafe Design) via his headset. Use of the Intercom is not possible.

WARNING

Before returning the aircraft to service, the problem must be resolved.

3.10.3 Low Voltage Indication

A) <u>Low voltage indication on the ground (needle in or below red-green shaded arc)</u>

1. Engine speed — Increase RPM until the needle moves into the green arc. (RPM should be below 1350)
2. All non-essential equipment — OFF, until needle moves into the green arc
3. If the needle remains in or below the red-green shaded arc — Do not fly before problem is eliminated.

B) <u>Low voltage indication in flight (needle in or below red-green shaded arc)</u>

1. All non-essential equipment — OFF, until the needle moves into green the arc
2. If the needle remains in or below the red-green shaded or yellow arc — Alternator is defective. Proceed in accordance with section 3.10.2

C) <u>Low voltage indication during approach and landing (needle in or below red-green shaded arc)</u>

1. After landing — Proceed in accordance with paragraph 3.10.3 A)

WARNING

Whenever the needle of the voltmeter is within the RED ARC, land at the nearest airfield to eliminate the problem before continuing the flight..

NOTE

Color of voltmeter caution zone may vary from manufacturer between red-green shaded or yellow t.

3.11 FLAP CONTROL SYSTEM MALFUNCTIONS

FLAP POSITION INDICATOR or FLAP ACTUATOR MALFUNCTION

1.	**Flap Actuator** circuit breaker *(see 3.1.1)*	RESET, if tripped
2.	**Flap Control** circuit breaker (see 3.1.1)	RESET, if tripped
3.	Flap position	visually CONFIRM on the left wing
4.	Airspeed	maintain within the WHITE ARC on the airspeed indicator
5.	Flap switch	SWITCH through all positions.

If the flap actuator is inoperative or the flap position indicator reading is incorrect, approach and landing must be conducted at an airspeed safe for the current flap setting.

WARNING

During landings with the flaps <u>not in the landing position</u>, stall speed and landing distance increase.

3.12 TRIM CONTROL SYSTEM FAILURES

3.12.1 Trim System Inoperative

1.	**Trim Actuator** circuit breaker *(see 3.1.1)*	RESET, if tripped
2.	**Trim Control** circuit breaker *(see 3.1.1)*	RESET, if tripped
3.	Trim switch then “Nose Down”	repeatedly PRESS “Nose UP” and

NOTE

An inoperative trim system does not affect aircraft controllability. However, the control stick forces are considerably higher and may reach up to 22 lb (10kg).

4. Land at the nearest airfield.

3.12.2 Trim Actuator Runaway

1.	Control Column	HOLD in position
2.	**Trim Actuator** circuit breaker	PULL
3.	Trim switch	CHECK if pressed or jammed

<u>If the problem is obvious, and can be solved:</u>

4.	**Trim Actuator** circuit breaker *(see 3.1.1)*	RESET

NOTE

Approx. 8 seconds are required to trim from full nose-down to full nose-up or vice versa.

<u>If the problem cannot be solved:</u>

5. Land at the nearest airfield.

3.13 AVIONICS MALFUNCTIONS

3.13.1 Complete Avionics Failure

1.	**Avionics** switch	SWITCH OFF then ON, approx. 20 sec. interval

If the switch trips to the off position:

2. Land at the nearest suitable airfield.

3.13.2 Receive Mode Failure of COM-Equipment

1.	Push-to-Talk (PPT) switch	CHECK pilot's and co-pilot's PTT-switches are not pressed or jammed (also check transceiver display). CHECK connectors.
2.	Head-set If no noise is audible:	Momentarily switch off SQUELCH. CHECK head-set connectors.

3.13.3 Transmit Mode Failure of COM-Equipment

1.	Transmit-Signal TX	CHECK if displayed while transmitting.
2.	Selected frequency	CHECK, if correct
3.	Microphone	CHECK, if necessary replace head-set.

If the problem cannot be eliminated, set transponder to 7600 (radio failure) as required.

.3.13.4 Primary Flight Display Failure

1. **PFD** circuit breaker *(see 3.1.1)* RESET, if tripped
2. **AHRS** circuit breaker *(see 3.1.1)* RESET, if tripped
3. **ADC** circuit breaker *(see 3.1.1)* RESET, if tripped

It is possible to safely continue flight, even if the PFD failure cannot be corrected in flight, by referencing the remaining instruments. It may, none the less, be prudent to land at the nearest airfield.

NOTE

Following information is still available when the PFD fails:

Attitude:	*Natural horizon*
Altitude:	*GPS altitude, Transponder altitude, ground visibility*
Heading/Track:	*Compass, GPS ground track*
Airspeed:	*GPS ground speed, stall warning*

3.13.5 Magnetometer Failure

1. **AHRS** circuit breaker RESET, if tripped

NOTE

In the event of a magnetometer failure a red X will be displayed over the course display. If the GDU 620 is receiving a valid GPS ground track signal, the magnetic heading display will be replaced with the GPS ground track. The GPS ground track is displayed in magenta.

3.13.6 Complete Navigation System Failure

1. **AHRS** circuit breaker *(see 3.1.1)* RESET, if tripped
2. Navigation Compass, GPS

NOTE

In the event of a complete navigation system failure (magnetometer and GPS ground track) a red X will be displayed over the course display and the markings on the compass rose disappear

3.13.7 AHRS Failure

1. **AHRS** circuit breaker *(see 3.1.1)* RESET, if tripped

NOTE

In the event of an AHRS Failure, the horizon is no longer displayed on the PFD. Additionally a red "X" and in yellow "AHRS FAILURE" is displayed. A Navigation System Failure, as described in section 3.13.6, accompanies an AHRS Failure.

3.13.8 ADC Failure

1. **ADC** circuit breaker *(see 3.1.1)* RESET, if tripped
2. Continue flight Using stand-by instruments (see 3.13.4)

NOTE

Failure of the Air Data Computers (ADC) is indicated through a red X and yellow text above the airspeed indicator, the altimeter, the vertical speed indicator, the TAS and the OAT indicators. Certain functions, such as TAS and wind calculation, are no longer usable.

3.14 STARTER MALFUNCTION

During engine start on ground, power transmission from the starter to the engine is defect (a continuing and excessive howling tone is audible).

1. Throttle IDLE
2. Ignition switch OFF
3. Repair damage before conducting planned flight.

3.15 IN-FLIGHT FAILURES AND MALFUNCTIONS

3.15.1 Inadvertent Release and Opening of the Canopy in flight

In the event of an inadvertent release and opening of the canopy in flight, a stationary canopy opening angle of about 20° - 30°, depending on the flight condition, is reached. Because the canopy opens forwards, the canopy cannot be torn off during flight. Even though the airflow conditions around the aircraft change considerably with an open canopy in flight, the aircraft remains fully controllable. Initial flight attitude changes can be easily corrected. Do not unbuckle the seat belt in order to close the canopy. During solo flights, carefully try to close the canopy without neglecting flight tasks and pilot responsibilities. If this is not possible, continue the flight with the open canopy and land at the nearest airfield.

1. Keep calm, there is no imminent danger.

2.	Flight attitude	Stabilize flight attitude. Under consideration of the actual conditions, establish stationary horizontal level flight.
	Airspeed	65 – 75 KIAS
3.	Canopy	If possible, close and lock canopy in flight. Check the canopy locking and the position of the Canopy Locking Lever periodically until landing. If it is not possible to close the canopy, continue flight with the open canopy and land at the nearest airfield.

.

SECTION 4

NORMAL PROCEDURES

		Page
4.1	INTRODUCTION	4-2
4.2	AIRSPEEDS FOR NORMAL OPERATION	4-3
4.3	DAILY INSPECTION	4-4
4.4	PRE-FLIGHT INSPECTION	4-9
4.5	CHECKLISTS FOR NORMAL PROCEDURES	4-11
4.5.1	Before Engine Start-up	4-11
4.5.2	Engine Start-up	4-12
4.5.3	Before Taxiing	4-13
4.5.4	Taxiing	4-13
4.5.5	Before Take-off (at the Taxi Holding Position)	4-14
4.5.6	Take-off	4-15
4.5.7	Climb	4-15
4.5.8	Cruise	4-16
4.5.9	Descent	4-16
4.5.10	Landing	4-17
4.5.11	Go-Around (Balked Landing)	4-17
4.5.12	After Landing	4-17
4.5.13	Engine Shutdown	4-18
4.5.14	Refueling	4-18
4.5.15	Flight in Rain and/or with Wing Contamination	4-19

4.1 INTRODUCTION

This section provides normal operating procedures and checklists for the aircraft as well as recommended airspeeds.

Additional information is provided in the current issues of the Operators Manual for ROTAX® engine Type 912 series and the Operation and Installation Manual of mt-Propeller® ATA 61-01-024.

Normal procedures associated with optional equipment can be found in Section 9

4.2 AIRSPEEDS FOR NORMAL OPERATION

The following airspeeds are based on the maximum take-off weight of 1653 lbs (750 kg). They may also be used for any lower operational weight.

TAKE-OFF		
Airspeed (IAS)		**kts**
Normal climb speed to 50 Feet (Flaps **T/O**)		57
Best rate of climb speed at sea level (Flaps **UP**)	V_Y	65
Best angle of climb speed at sea level (Flaps **T/O**)	V_X	52

LANDING		
Airspeed (IAS)		**kts**
Final approach speed for landing (Flaps **LDG**)		60
Balked landing (Flaps **LDG**)		60
Maximum demonstrated crosswind component for take-off or landing		15
Maximum airspeed with Flaps **LDG**	V_{FE}	90

CRUISE		
Airspeed (IAS)		**kts**
Maneuvering speed	V_A	112
Maximum Turbulent Air Operating Speed	V_{NO}	130

4.3 DAILY INSPECTION

CAUTION

*The daily inspection is begun by checking all 3 fuel sumps for water and contamination. This must be done **before** the aircraft is moved. Otherwise the fuel in the sump may mix.*

1.	Tank drain (left / right wing)	drain and visually inspect for contamination
2.	Electrical fuel pump drain	drain and visually inspect for contamination

A) CABIN

1.	Aircraft Documentation	CHECK on board
2.	Ignition key	REMOVED
3.	**ALT1/ BAT** switch	ON
4.	Warning lights (**ALT1, FUEL**)	ILLUMINATE
5.	**ALT1** switch	OFF
6.	Engine instruments	CHECK
7.	Fuel quantity	CHECK
8.	**Nav Lights** switch	ON, CHECK, OFF
9.	**Landing Light** switch	ON, CHECK, OFF
10.	**BAT** switch	OFF
11.	ELT	CHECK operational
12.	Foreign objects	CHECK and REMOVE, when necessary
13.	Baggage	STOWED and SECURED
14.	Canopy	CHECK condition and cleanliness

B) EXTERIOR CHECK, Visual Inspection

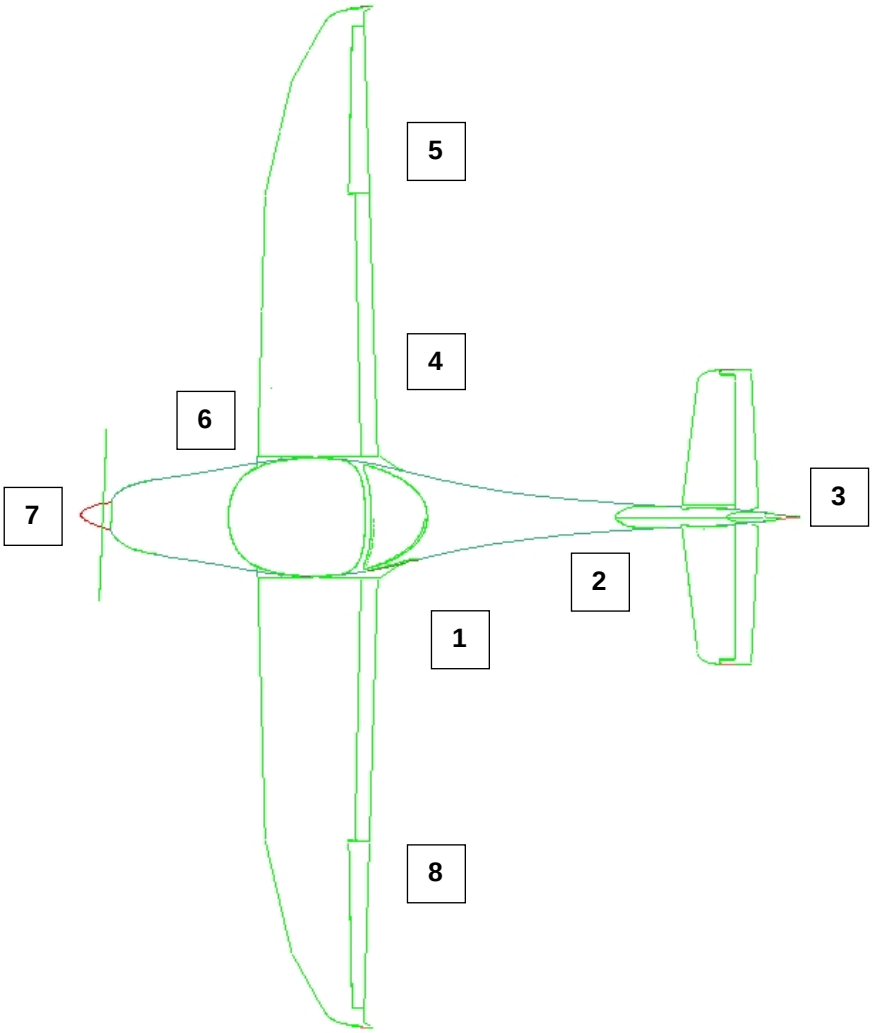

CAUTION

In this manual, visual inspection means the following:
Inspect for mechanical damage, dirt, cracks, delamination, excessive play, looseness, leaks, incorrect attachment, foreign objects and general condition.

Control surfaces: in addition, check for free movement.

1. Left main landing gear

a) Landing gear strut	Visual inspection
b) Wheel fairing	Visual inspection (refer to 7.11.4)
c) Tire pressure and slip marking	CHECK
d) Tire, wheel, brake	Visual inspection
e) Chocks (if in use)	REMOVE

2. Fuselage

a) Fuselage shell	Visual inspection
b) Skid plate	Visual inspection
c) Tail tie-down	DISCONNECT

3. Empennage

a) Elevator	Visual inspection
b) Horizontal stabilizer	Visual inspection
c) Rudder	Visual inspection, CHECK: fitting and bolt connection, proper control cable connection and safe-tied.
d) Vertical stabilizer	Visual inspection

4. Right main landing gear

a) Landing gear strut	Visual inspection
b) Wheel Fairing	Visual inspection (refer to 7.11.4)
c) Tire pressure and slip marking	CHECK
d) Tire, wheel, brake	Visual inspection
e) Chocks (if in use)	REMOVE

5. Right wing

a) Entire wing surface (upper and under side)	Visual inspection
b) Fuel vent	CHECK if clear
c) Flap	Visual inspection
d) Aileron and inspection window	Visual inspection
e) Wing tip, NAV lights and ACL	Visual inspection
f) Fuel level	CHECK with dipstick (see inner surface of baggage compartment door) and verify with the indicated fuel level on the fuel gauge cockpit
g) Fuel tank filler cap	CHECK if closed
h) Wing tie-down	DISCONNECT

6. Nose section, cowling

WARNING

Before cranking the propeller:
*Ignition and **ALT1/BAT** switch: OFF*
Set the parking brake.

WARNING

RISK OF BURNS !
Only check the oil and coolant levels when the engine is cool.

a) Check oil level — Turn the propeller several times in the **direction of engine rotation** to pump oil from the engine back into the oil tank.

CAUTION

***NEVER** turn the propeller against the direction of engine rotation.*

Stop turning the propeller when air begins to return to the oil tank. This is indicated by the sound of air rushing from the open oil tank.
Use the oil dip stick to check that the oil level is between the -min./max.- markings. The difference between -min./max.- is approximately 0.48 US Quarts (0.45 l).

CAUTION

The oil specification in Section 1.9.1 must be adhered to!

b) Check coolant level: Verify coolant level in the **expansion tank** and replenish as required. (The expansion tank must be at least 2/3 filled or coolant has to be visible at the gauge glass.)

Verify coolant level in the **overflow bottle** and replenish as required. (The coolant level must be between the min. and max. markings.)

CAUTION

The coolant specification in Section 1.9.2 must be adhered to!

c) Air Intakes	CHECK if clear
d) Cooler intake	CHECK if free from obstructions
e) Cowling	Visual Inspection; CHECK Camloc fasteners
f) Propeller and Spinner	Visual inspection
g) Propeller blades	CHECK for cracks and other damage

7. <u>Nose landing gear</u>

a) Nose gear strut	Visual inspection
b) Wheel fairing	Visual inspection

CAUTION

Both parts of the 2 piece nose wheel fairing must always be installed on the aircraft

c) Tire pressure and slip marking	CHECK
d) Tire, wheel	Visual inspection
e) Shock absorber unit	Visual inspection
f) Chocks and tow bar	REMOVE

8. <u>Left wing</u>

a) Entire wing surface (upper and under side)	Visual inspection
b) Fuel vent	CHECK if clear
c) **BAT** switch	ON
d) Stall warning	press to upper detent, warning tone is audible
e) **BAT** switch	OFF
f) Pitot / Static tube	REMOVE cover, CHECK if all openings are clear
g) Wing tip, NAV lights and ACL	Visual inspection
h) Aileron and inspection window	Visual inspection
i) Cooler cover (if installed)	Visual inspection
j) Fuel level	CHECK with dipstick and verify with the indicated fuel level on the fuel gauge
k) Fuel tank filler cap	CHECK if closed
l) Flap	Visual inspection
m) Wing tie-down	DISCONNECT

4.4 PRE-FLIGHT INSPECTION (Walk Around)

1.	Daily Inspection	Confirm has been carried out.
2.	Tow bar	Remove
3.	Fuel level	CHECK with dipstick and verify with the indicated fuel level on the fuel gauge

WARNING

Before cranking the propeller:
*Ignition and **ALT1/BAT** switch: OFF,*
Set the parking brake.

WARNING

RISK OF BURNS !
Only check the oil and coolant levels when the engine is cool !

4.	Check oil level	Turn the propeller several times in the direction of engine rotation to pump oil from the engine back into the oil tank. Stop turning the propeller when air begins to return to the oil tank. This is indicated by the sound of air rushing from the open oil tank. Use the oil dip stick to check that the oil level is between the min. and max. markings. The difference between min. and max. is approx. 0.48 US Quarts (0.45 l).

CAUTION

The oil specification in Section 1.9.1 must be adhered to !

5.	Check Coolant Level	Verify coolant level in the overflow bottle and replenish as required. (The coolant level must be between the min. and max. markings)

CAUTION

The coolant specification in Section 1.9.2 must be adhered to !

6.	Tie-down straps	remove
7.	Baggage door	CHECK if closed and locked
8.	Pitot cover	remove
9.	Control locks	remove
10.	Seating position	adjust and lock, check that nose wheel steering and brakes can be operated
11.	Carburetor heat	CHECK for free movement, then PUSH (OFF)
12.	Cabin heat	CHECK for free movement, then PUSH (OFF)
13.	Choke	CHECK for free movement and automatic reset
14.	Throttle	CHECK for free movement, then set IDLE
15.	Propeller Control Lever	CHECK for free movement, then set in START Position
16.	Weight and balance	within limits?

4.5 CHECKLISTS FOR NORMAL PROCEDURES

4.5.1 Before Engine Start-up

1.	Daily and Pre-Flight Inspection	COMPLETED
2.	Passenger Briefing	COMPLETED
3.	Seats	ADJUSTED
4.	Seat Belts and Harnesses	FASTENED
5.	Canopy	CLOSED and LOCKED Check locking mechanism
6.	Parking Brake	SET (pull lever back)
7.	Control column	CHECK for free movement and correct control surface deflections
8.	Fuel Selector Valve	LEFT or RIGHT
9.	Carburetor Heat	PRESS
10.	Throttle	IDLE
11.	Propeller Control Lever	START position
12:	**Avionics** Switch	OFF
13.	**P/S-Heat** (if installed)	OFF
14.	Circuit Breakers	CHECK all set

NOTE

*Cage the Attitude Indicator (if installed) before switching **ALT1/BAT** on.*

15.	**ALT1 / BAT** switch	ON

NOTE

Pay attention to messages that may appear on the PFD and MFD displays while the system is loading.

The attitude indicators (AHRS module and stand-by indicator) require several minutes to stabilize. Pay attention to information on the Garmin G500 display.

16.	**ALT 1** warning light	ILLUMINATES
17.	**FUEL** warning light	ILLUMINATES
18.	**P/S-HEAT** warning light (if installed)	ILLUMINATES
19.	**ACL** switch	ON

4.5.2 Engine Start-up

1.	**Fuel Pump** switch		ON
2.	**FUEL** warning light		OFF
3.	Throttle	- Cold Engine	IDLE
		- Hot Engine	0.8 in. (2 cm) OPENED
4.	Choke	- Cold Engine	PULL, and keep pulled
		- Hot Engine	RELEASE (automatic reset)
5.	Brakes		PRESS both pedals
6.	Propeller area		CLEAR
7.	Ignition switch		START, then BOTH
8.	Oil Pressure		CHECK, if oil pressure rises

CAUTION

The oil pressure has to show rising values within 10 seconds after engine start, otherwise shut down the engine immediately!

NOTE

The starter may not be operated for more then 10 seconds at a time. Allow the starter to cool off for at least 2 minutes between attempts.

9.	**ALT 1** warning light	OFF
10.	**Fuel Pump** switch	OFF

4.5.3 Before Taxiing

CAUTION

Warm up the engine for approx. 2 min at 800 RPM and then at 1000 RPM until the Oil Temperature reaches a temperature of at least 122°F (50°C)

1.	**Avionics** switch	ON
2.	Avionics and flight instruments	SET

The GARMIN G500 has an integrated sensor that automatically adjusts the brightness of the display.

It is also possible to adjust the brightness of the display manually. Using the large knob of the MFD change to the AUX page. Use the small knob to adjust the brightness. When finished press the ENT button to save the changes.

3.	Engine Instruments	CHECK

NOTE

Oil can be brought up to temperature during taxiing.

4.	Voltmeter	CHECK, if needle is within the green range
5.	Trim switch and indication	functional CHECK
6.	Flap switch and indication	functional CHECK, afterwards UP
7.	**P/S Heat** switch (if installed)	ON, **P/S HEAT** warning light goes off
8.	**P/S Heat** switch (if installed)	OFF, **P/S HEAT** warning light goes on
9.	all switches	AS REQUIRED

4.5.4 Taxiing

1.	Parking Brake	RELEASE
2.	Brakes	CHECK
3.	Nose Wheel Steering	CHECK (function, free movement)
4.	Flight instruments and Avionics	CHECK

CAUTION

Do not operate the engine at high RPM when taxiing to prevent damage to the propeller through stones or other foreign objects.

4.5.5 Before Take-off (at the Taxi Holding Position)

1.	Brakes	APPLY
2.	Parking Brake	SET
3.	Compass and gyro Instruments	CHECK setting
4.	Fuel Selector Valve	LEFT or RIGHT, switch to the fuller tank
5.	**FUEL** warning light	OFF, (otherwise, <u>do not attempt</u> take-off)
6.	Engine instruments	CHECK if within the green range
7.	Throttle	SET 1700 RPM
8.	Ignition switch	Magneto check: SWITCH through: "L-BOTH-R-BOTH" – positions. CHECK RPM-drop max. RPM-drop: 120 RPM max. difference L/R: 50 RPM RPM drop must be noticeable <u>then</u>: BOTH position
9.	Carburetor heat	PULL (ON) (RPM drop: 20 to 50 RPM)
10.	Carburetor temperature indicator (if installed)	CHECK
11.	Carburetor heat	PUSH (OFF)
12.	Propeller control lever	SWITCH 3 times between START and CRUISE positions (end stops) Check points: 1) RPM drop: 200 ± 50 RPM 2) increase manifold pressure 3) constant oil pressure (± 0,5 bar <u>then</u>: START position
13.	Throttle	IDLE
14.	**Fuel Pump** switch	ON
15.	Flap switch	T/O
16.	Trim switch	white marking
17.	Circuit breakers	CHECK all set
18.	Control column	CHECK for free movement
19.	Lap belt	FASTENED and TIGHTENED
20.	Canopy	CLOSED and LOCKED
21.	Parking brake	RELEASE

4.5.6 **Take-off** (up to 50 ft)

1.	Throttle	WIDE OPEN
2.	Tachometer	CHECK if within 2300 - 2385 RPM
3.	Elevator, control column	NEUTRAL during initial ground roll
4.	Rudder pedals	Maintain direction
5.	Rotatespeed	50 KIAS
6.	Climb speed	57 KIAS

CAUTION

*To **increase power setting raise RPM first** and **open throttle second**.*
*To **decrease power setting close throttle first** and **lower RPM second**.*

CAUTION

For the shortest take-off distance over a 50-feet obstacle at sea level:

7.	Rotate speed	50 KIAS
8.	Climb speed (V_X)	52 KIAS

4.5.7 **Climb**

1.	Throttle	WIDE OPEN
2.	Propeller control lever (max. 5 minutes)	2385 RPM, afterwards 2260 RPM
3.	Engine instruments	CHECK if in GREEN range

NOTE

During take-off and climb at take off power the RPM is intended to be in the caution area because the maximum continuous rpm is exceeded. This is acceptable for max. 5 minutes.

4.	Flap switch	UP
5.	Climb speed	65 KIAS
6.	**Fuel Pump** switch	OFF
7.	**Landing Light** switch	OFF
8.	Trim switch	SET as required

NOTE

The best rate-of-climb speed, V_Y, is a function of the operating weight and decreases with altitude. For more information, refer to Section 5.2.6.

4.5.8 Cruise

1.	Throttle	AS REQUIRED (Ref. to Section 5, Page 5-11)
2.	Propeller control lever	SET 1650 to 2260 RPM

CAUTION

Continuous operation with throttle wide open and propeller revolution below 2140 RPM should be avoided to prevent engine damage in particular at pressure altitudes below 3000ft and at high CHT (see SL-912-016)

NOTE

For best manifold pressure/propeller speed combinations: Refer to Section 5, page 5-11

3.	Flaps switch	UP
4.	Trim switch	SET as required
5.	**P/S Heat** switch (if installed)	AS REQUIRED, OFF at OAT above 59° F (15° C)
6.	Engine instruments	CHECK if in green range
7.	Carburetor temperature indicator (if installed)	MONITOR

CAUTION

*During flights above a pressure altitude of 6000 ft, the fuel pressure warning light must be monitored closely. If the **FUEL** warning light goes ON, the **Fuel Pump** must be switched ON to prevent fuel vapor formation in the fuel system.*

4.5.9 Descent

1.	Throttle	First decrease AS REQUIRED
2.	Propeller control lever	Second SET above 2000 RPM
3.	Carburetor heat	AS REQUIRED
4.	Carburetor temperature indicator (if installed)	MONITOR

CAUTION

For a rapid descent proceed as follows:

Throttle	*First IDLE*
Propeller control lever	*Second START*
Carburetor heat	*PULL (ON)*
Flaps	*UP*
Airspeed	*130 KIAS*
Oil and cylinder head temperature	*maintain in green range*

4.5.10 Landing

1.	Lap belt	CHECK SECURE
2.	**Fuel Pump** switch	ON
3.	Carburetor heat	PULL (ON)
4.	Throttle	AS REQUIRED
5.	Airspeed	90 KIAS
6.	Flaps switch	T/O or LDG
7.	Trim switch	AS REQUIRED
8.	Flaps switch	LDG
9.	Approach speed	60 KIAS
10.	Propeller control lever	START
11.	**Landing Light** switch	ON (as required)

CAUTION

In strong headwinds or crosswinds, in turbulent air or in wind shear, it may be desirable to approach using less flaps and at a higher airspeed.

4.5.11 Go-Around (Balked Landing)

1.	Throttle	First WIDE OPEN
2.	Propeller control lever	Second START
3.	Carburetor Heat	PUSH (OFF)
4.	Flaps switch	T/O
5.	Airspeed	65 KIAS

CAUTION

Any operation with throttle wide open and carburetor heat engaged should be avoided to prevent engine damage.

4.5.12 After Landing

1.	Throttle	AS REQUIRED
2.	Flaps switch	UP
3.	**P/S Heat** switch (if installed)	OFF
4.	Carburetor Heat	PUSH (OFF)
5.	**Fuel Pump** switch	OFF
6.	Transponder	OFF
7.	**Landing Light** switch	OFF

4.5.13 Engine Shutdown

1.	Throttle	IDLE
2.	Parking Brake	SET
3.	Flaps switch	LDG
4.	ELT	CHECK (frequency 121.5 MHz)
5.	**Avionics** switch	OFF
6.	Ignition Switch	OFF
7.	Electrical equipment	OFF
8.	**ALT1 / BAT** switch	OFF

NOTE

*The GARMIN G500 is turned off with the **ALT1/BAT** switch.*

9.	Chocks and tie-downs	AS REQUIRED

4.5.14 Refueling

1. Engine Shutdown as in Section 4.5.13
2. Ground the aircraft

CAUTION

*During refueling, the aircraft **must** be grounded (for example at the end of the exhaust pipe.)*

3. Open fuel tank filler cap
4. Refuel both tanks equally

NOTE

Insert the fuel pump nozzle carefully into the tanks to avoid damage.

5. Replace the fuel tank filler caps
6. Remove grounding cable

4.5.15 Flight in Heavy Rain and/or with Wing Contamination

CAUTION

When flying with wet and/or contaminated wings and control surfaces, performance and handling qualities may be reduced. This applies in particular to take-off distance, climb performance, cruising speed and stall characteristics.

The stall speed may increase up to 3 kts and the air speed indicator may give false readings.

Visibility may deteriorate considerably in rain.

[intentionally left blank]

SECTION 5

PERFORMANCE

		Page
5.1	INTRODUCTION	5-2
5.2	PERFORMANCE CHARTS	5-3
5.2.1	Airspeed Calibration	5-3
5.2.2	Stall Speeds	5-4
5.2.3	Crosswind Component	5-5
5.2.4	Flight Planning	5-6
5.2.5	Take-off Distance	5-7
5.2.6	Climb Performance / Cruise Altitude	5-8
5.2.7	Climb: Fuel Consumption, Time and Distance	5-9
5.2.8	Cruise Performance (TAS – True Airspeed)	5-10
5.2.9	Cruise Power Settings	5-11
5.2.10	Maximum Endurance	5-12
5.2.11	Maximum Range	5-13
5.2.12	Descent: Fuel Consumption, Time and Distance	5-14
5.2.13	Landing Distance	5-15
5.2.14	Climb Performance after Go-Around (Balked Landing)	5-16
5.2.15	Flight Planning Example	5-17
5.3	Noise Characteristics / Abatement	5-22

5.1 INTRODUCTION

The performance data in the following charts give an overview on the performance and capabilities of the AQUILA AT01. This information provides the basis for flight planning prior to every flight.
All data in the charts haves been acquired during flight testing conducted with an aircraft and engine in a good operating condition. The performance data was then corrected to ICAO Standard Atmospheric conditions (59°F / 15°C and 29.92 inHg / 1013.25 hPa at sea level).
The performance data presented can be achieved with a well-maintained aircraft and with average piloting techniques, when the procedures specified in this manual are followed.

The fuel flow data for cruise presented here are based on the recommended RPM/manifold pressure setting for each altitude. However, fuel flow and the resulting endurance, with and without reserve, depend on engine condition, surface quality of the aircraft (clean and dry) and meteorological conditions.
For precise flight planning and in order to estimate the amount of fuel required for a particular flight, all available information should be used and all influencing factors considered.

5.2 PERFORMANCE CHARTS

5.2.1 Airspeed Calibration

Airspeed calibration accounts for the position error of the pitot-static pressure system, but not for the instrument error.

Assumption: zero instrument error
Example: 120 KIAS (indicated airspeed) corresponds to 118 KCAS (calibrated airspeed)

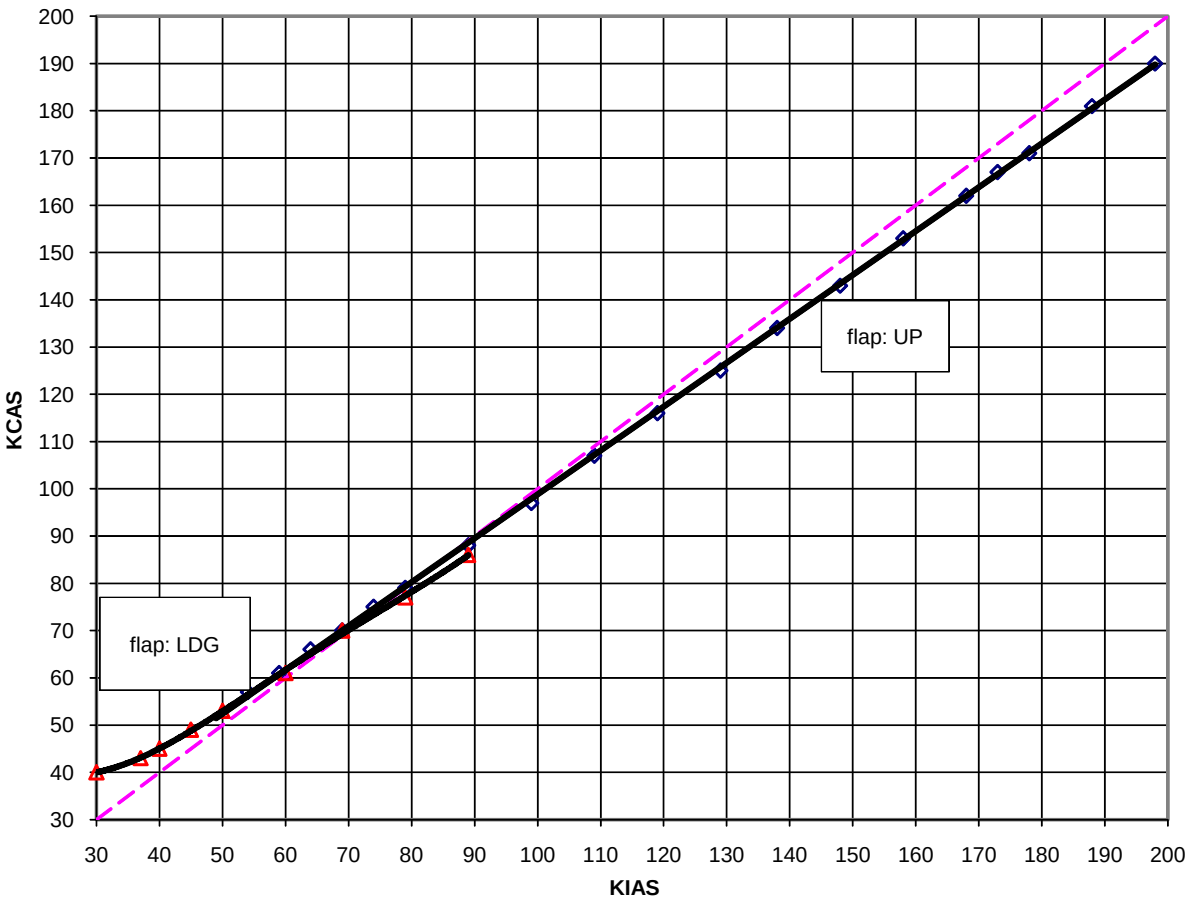

Fig.: 5.2.1 Airspeed Calibration

5.2.2 Stall Speeds

Stall speeds were determined in the following configuration:

- Forward center of gravity (CG) limit: 16.8 in (427 mm) behind the Ref. Datum
- Takeoff weight 1653 lb. (750 kg)
- Engine idle

Flap Position	**Bank Angle**				
	0°		**30°**	**45°**	**60°**
	KCAS	**KIAS**	**KIAS**	**KIAS**	**KIAS**
UP	52	49	51	55	> 64
T/O	48	45	47	51	> 60
LDG	43	39	42	47	> 57

Tab.: 5.2.2 Stall Speeds [kts]

NOTE

Stalling speed with bank angle should be considered as for reference purposes only. Slight differences in how the aircraft stalls can lead to discrepancies. The greater the angle of bank and flap deflection, the greater the discrepancies.

5.2.3 Demonstrated Crosswind Component, Crosswind Diagram

Maximum demonstrated crosswind component: 15 knots (27 km/h)

WARNING

Stronger crosswind components may render the aircraft uncontrollable!

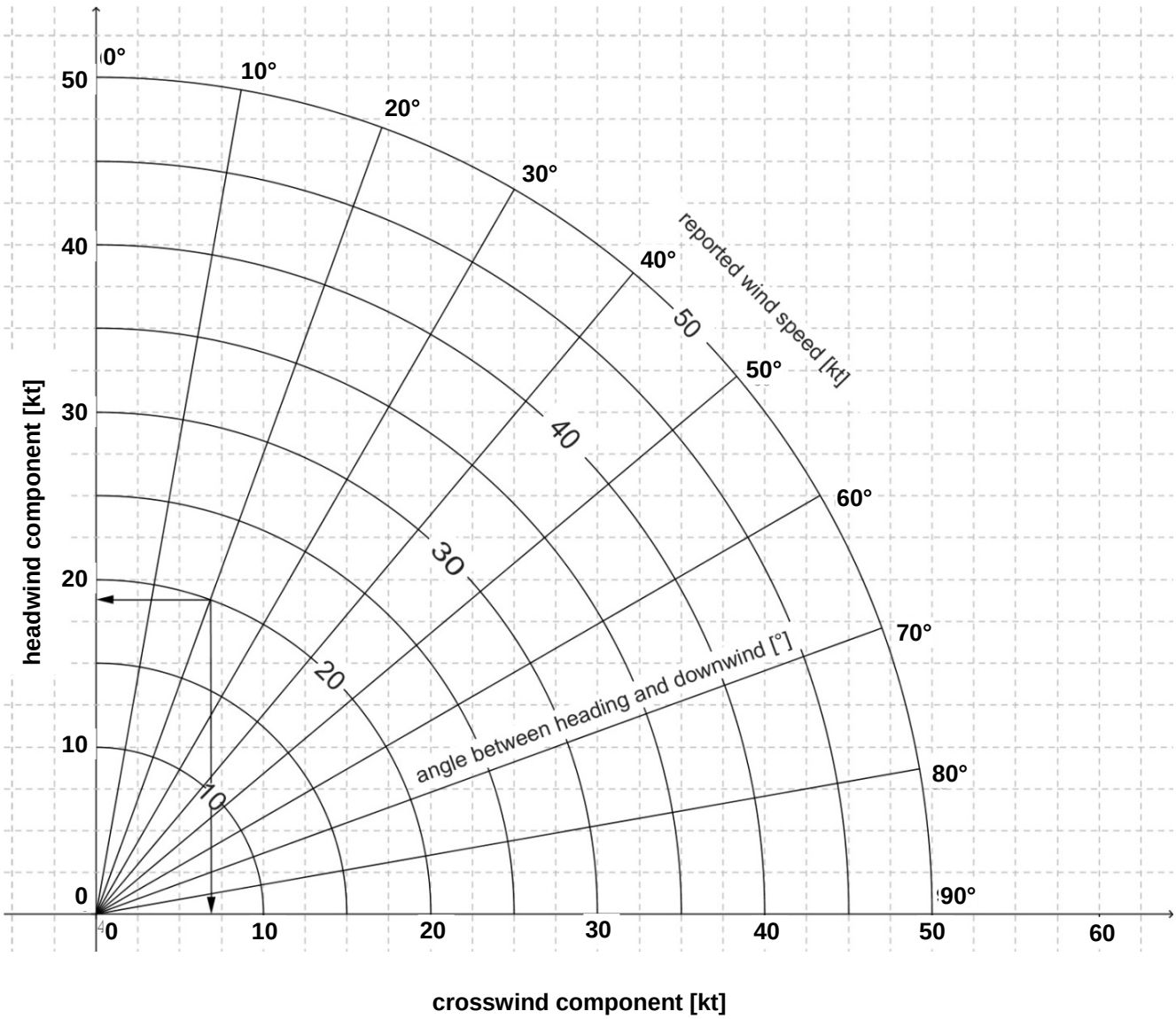

5.2.4 Flight Planning

The performance tables and diagrams on the following pages contain all information required for flight planning from take-off at your point of departure to the landing at your destination.

Experience shows that the data determined during flight planning match the values achieved in flight accurately. However, it is important that flight planning is done carefully, that the aircraft is in a good operating condition and that the pilot is proficient.

During flight planning, it is important to be conservative when reading diagrams and rounding values. Differences between the actual performance data of the aircraft “at hand” and the data specified in this manual, the influence of turbulence or wing contamination can cause errors of up to 10% when calculating range and endurance.

NOTE

Insects or other contamination on the propeller or the leading edge of the wing can significantly reduce the performance and handling qualities of the aircraft.

The influence of altitude and ambient air temperature on performance is determined as follows:

1. Set the altimeter to 29.92 inHg (1013 hPa) to determine pressure altitude.
2. Using the appropriate diagrams and the ambient air temperature, the density altitude influence can be accounted for.

CAUTION

Reset the altimeter to the appropriate altimeter setting (local QNH value) to determine altitude above sea level.

5.2.5 Take-off Distance

Take-off Weight [lbs]([kg])	Airspeed [KIAS]	
	Lift-Off	50 ft
1653 (750)	50	57
1323 (600)	50	55

Conditions:

Throttle Wide Open (max 5 min.)
RPM: 2385 RPM
Flaps: T/O
Paved, level, dry runway

Notes:

- For operations on dry, grass runway, increase ground roll distance by 25%, on soft grass runway up to 40%.
- Snow and slush require an appropriate increase in ground roll.
- In high humidity conditions the take-off dictance may increase up to 10%.
- An improperly maintained aircraft, deviating from procedures, poor meteorological and ambient conditions (rain, crosswind, wind shear etc.) may increase take-off distances significantly.

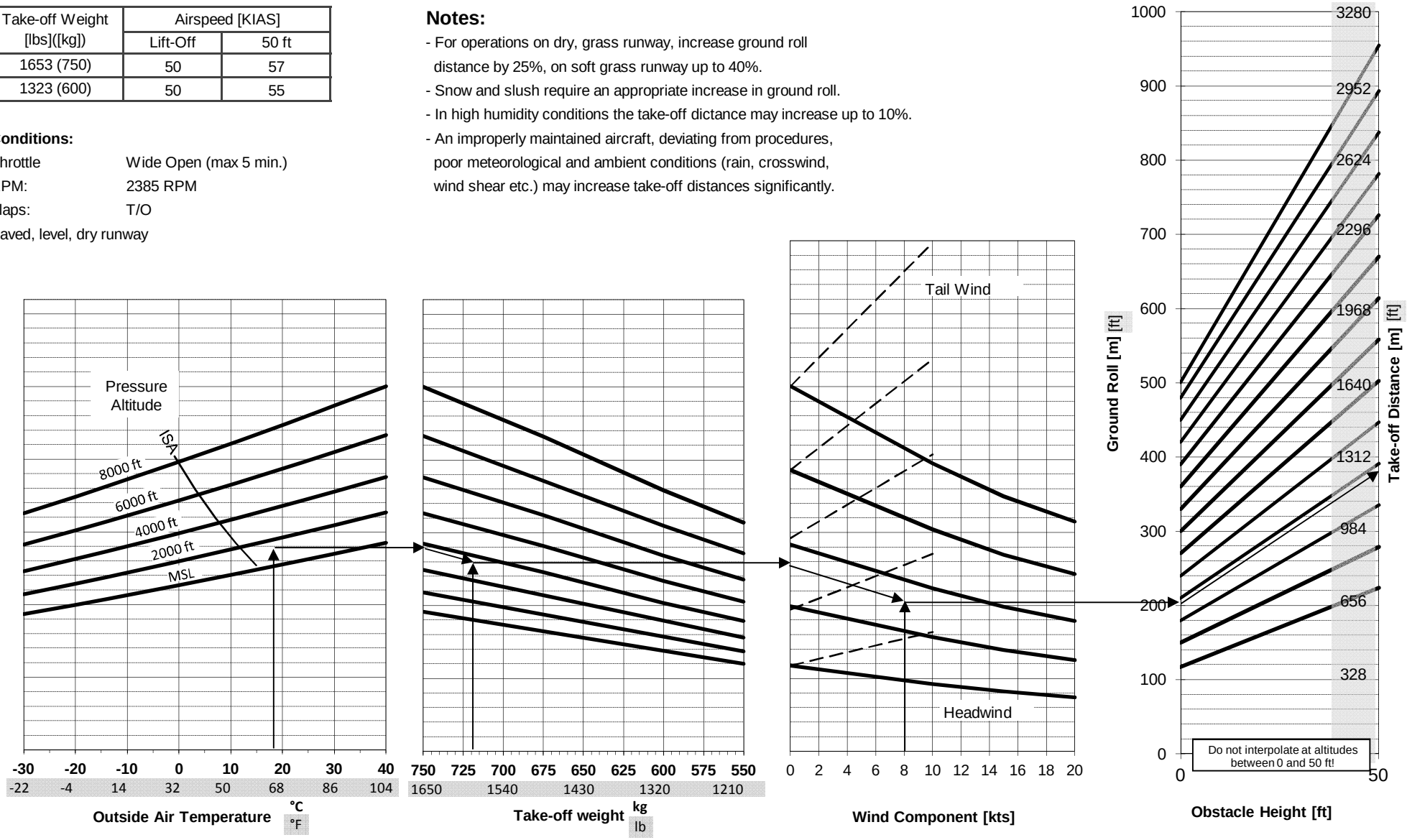

Example: Pressure Altitude 1800 ft
Outside Air Temperature 64°F (18°C)

Take-off Weight 1587 lbs (720 kg)

Headwind: 8 kts

Take-off roll: 663 ft (202 m)
Take-off distance: 1230ft (375 m)

5.2.6 Rate of Climb / Cruise Altitude

Take-off Weight [lbs]([kg])	Service Ceiling (ISA)	Best Rate-of-Climb Speed [KIAS]		
		MSL-5000 ft	10 000 ft	13 000 ft
1653 (750)	14 500 ft	65	63	61
1323 (600)	14 500 ft	62	61	60

Conditions:
Throttle: MCP
RPM 2260 URPM
Flaps: UP

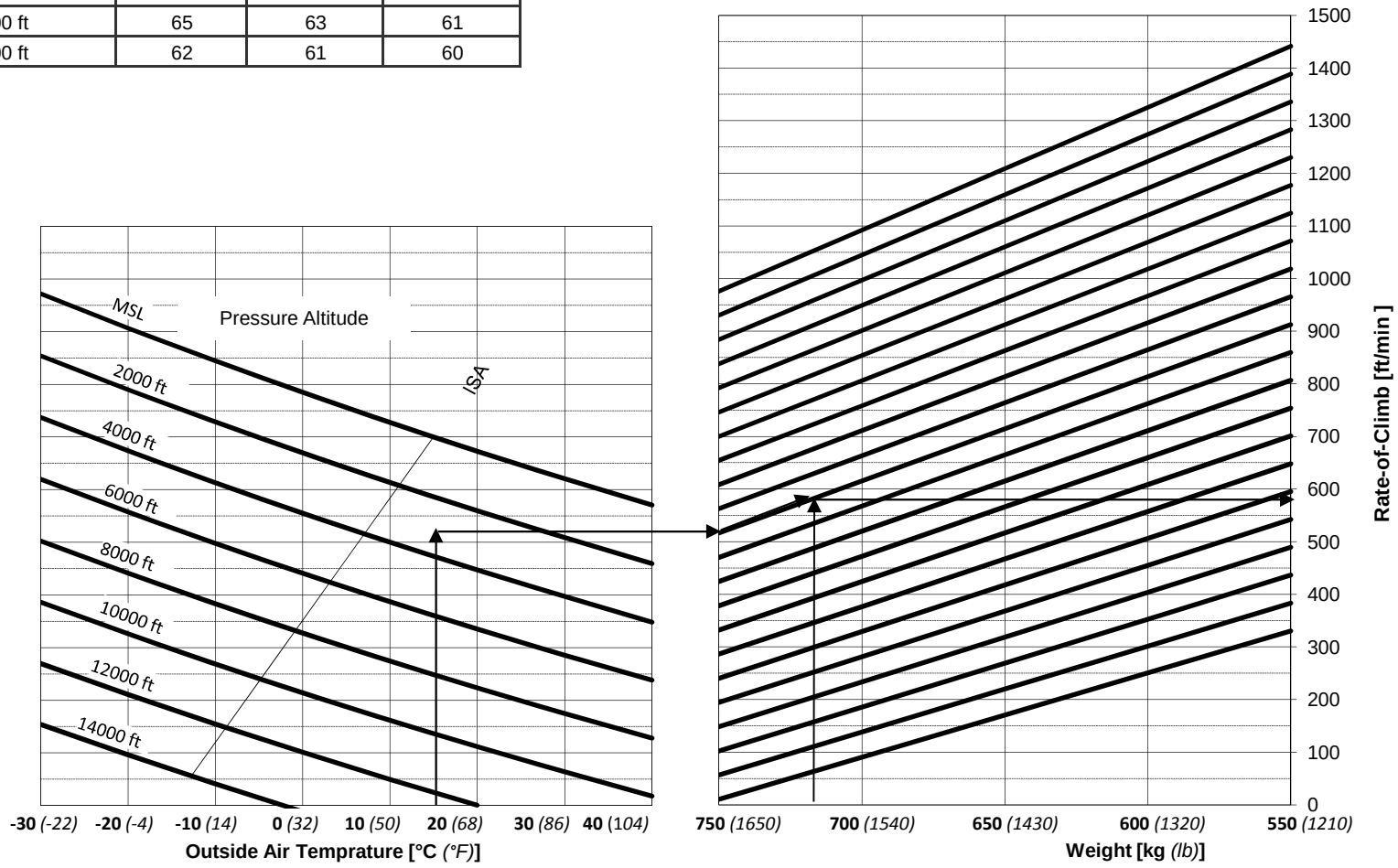

Example: Pressure Altitude 3000 ft Weight 1587 lb (720 kg) Rate-of-Climb 575 ft/min
Outside Air Temperature +59°F (15°C)

5.2.7 Climb: Fuel, time and Distance

Conditions:
2260 rpm, MCP,
Flaps : UP
m = 750 kg (1653 lb)
no-wind

Vy= 65 KIAS, to 5000 ft
Vy= 63 KIAS, to 10.000 ft
Vy= 61 KIAS, to 13.000 ft

For each 8°C above ISA, increase time, distance and fuel by 10%.

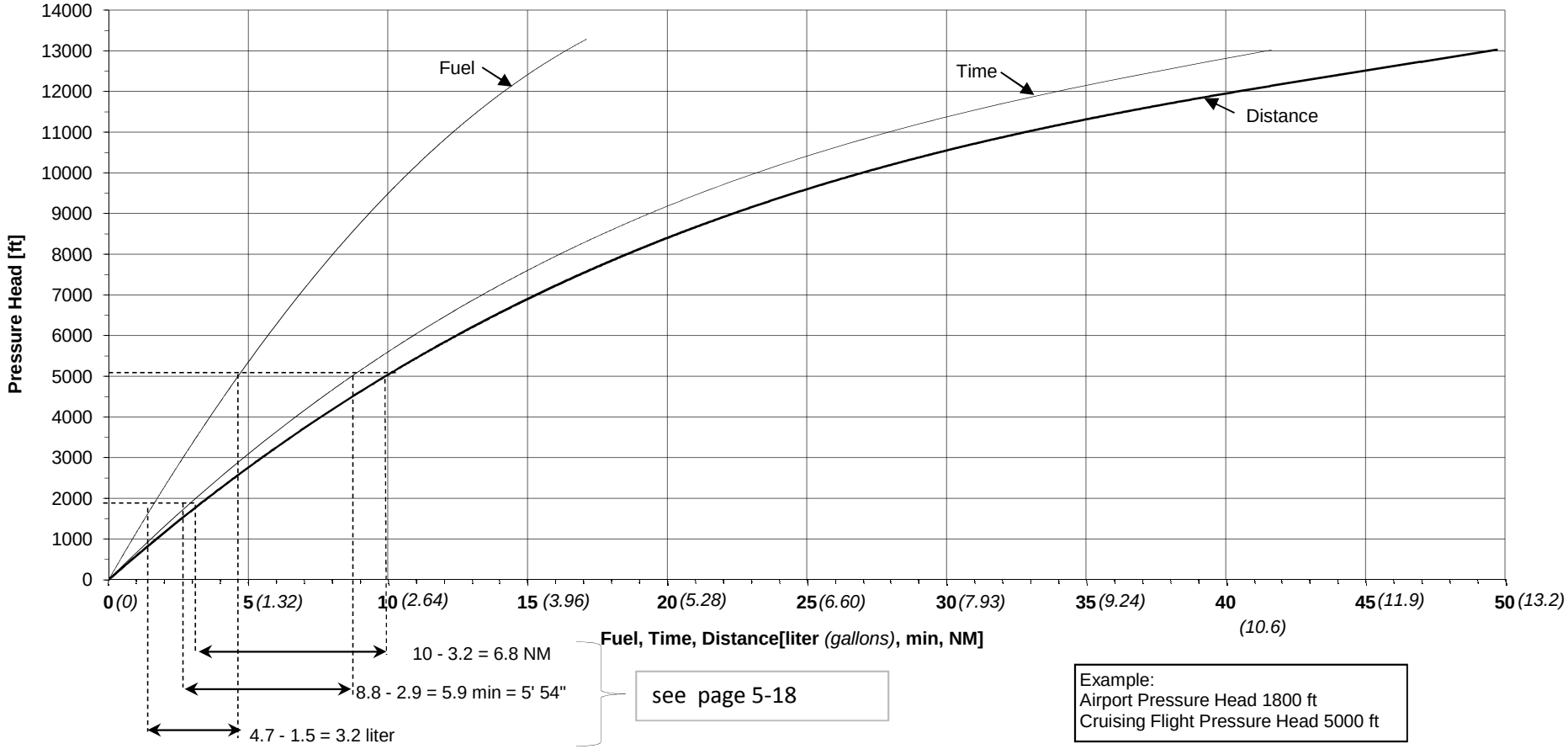

see page 5-18

Example:
Airport Pressure Head 1800 ft
Cruising Flight Pressure Head 5000 ft

5.2.8 Cruising Speed (TAS – True airspeed)

Conditions:
Performance: Settings after schedule on page 5-11
Flight weight: 750 kg (1653 lb)
Flaps: UP

Notice: Flying without any wheel fairings or with mud guards reduces performance up to 10%.

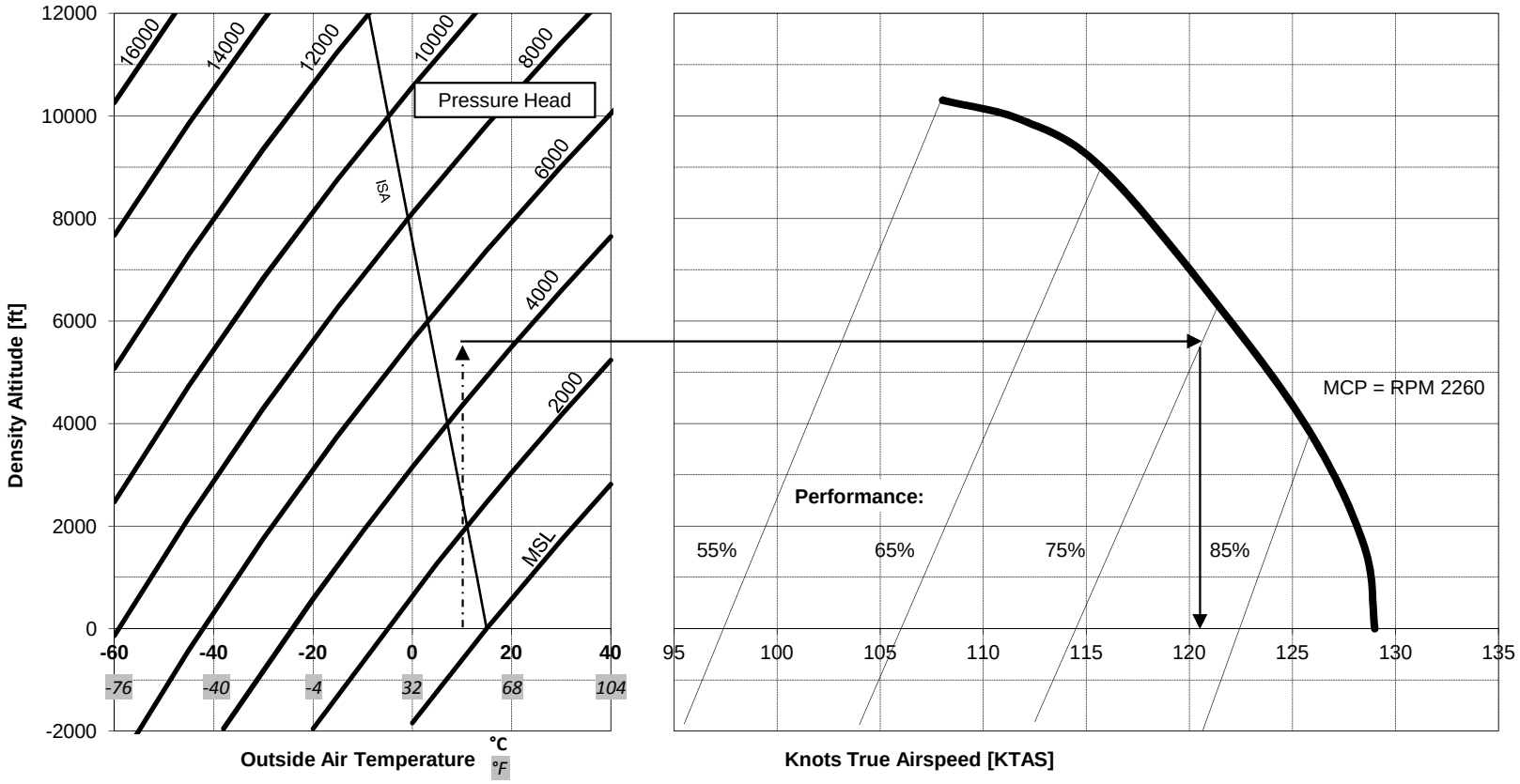

Example: Pressure Head 5000 ft Density Altitude: 5600 ft Set Performance: 75% Speed: 121 kts
Outside Air Temperature +50°F (+10°C)

5.2.9 Cruise Power Settings

Pressure altitude	Standard temperature		Engine performance in % of MCP																			
			55%				65%				75%				85%				MCP			
H	T	T	RPM	MP	FF	FF	RPM	MP	FF	FF	RPM	MP	FF	FF	RPM	MP	FF	FF	RPM	MP	FF	FF
[ft]	[°C]	[°F]	[U/min]	[in Hg]	[l/h]	[gal/h]	[U/min]	[in Hg]	[l/h]	[gal/h]	[U/min]	[in Hg]	[l/h]	[gal/h]	[U/min]	[in Hg]	[l/h]	[gal/h]	[U/min]	[in Hg]	[l/h]	[gal/h]
0	15	59	1900	24.6	14.0	3.7	2000	25.7	15.6	4.12	2100	27.0	21.0	5.55	2260	27.7	24.0	6.34	2260	28.0	26.0	6.87
2000	11	52	1900	24.0	15.0	4.0	2000	24.7	16.0	4.23	2200	25.7	21.3	5.63	2260	26.7	22.0	5.81	2260	27.0	26.0	6.87
3000	9	48	1900	23.7	15.5	4.1	2050	24	16.4	4.33	2230	25.0	21.4	5.65	2260	26	22.0	5.81				
4000	7	44	1900	23.3	16.0	4.2	2100	23.3	16.8	4.44	2260	24.3	21.5	5.68	2260	25.2	22.0	5.81				
5000	5	41	1950	22.7	16.5	4.4	2150	23	18.1	4.77	2260	23.8	21.9	5.79								
6000	3	37	2000	22.0	17.0	4.7	2200	22.7	19.3	5.1	2260	23.3	22.3	5.89								
8000	-1	30	2100	21.0	18.0	4.8	2200	21.5	21.5	5.68	2260	21.5	23.0	6.08								
10,000	-5	23	2200	19.7	19.0	5.0	2260	20.1	22.0	5.81												
12,000	-9	16	2260	18.5	19.0	5.0																

MCP: maximum continuous power
RPM: revolutions per minute
MP: manifold pressure
FF: fuel flow

<u>Correction for non ISA temperature conditions:</u>

For each 50°F (10°C) above ISA: increase Manifold Pressure by 3%, Fuel consumption increases by 5%

For each 50°F (10°C) below ISA: decrease Manifold Pressure by 3%, Fuel consumption decreases by 5%

Sample calculation: page 5.22

5.2.10 Maximum Endurance

Condition:
Power setting: according to the table on page 5-11
Airplane mass: 1653 lbs (750 kg)
Flaps: UP

NOTE:
A not properly maintained engine and aircraft may considerably reduce the endurance of the airplane.

Fuel quantity: usable fuel 28.9 US gal (109.6 l)
The calculation of the endurance includes:
1. Fuel for engine start-up and taxiing: 0.5 US gal (2 l)
2. Fuel for take-off and climb to cruise altitude with max. continuous power as well as fuel for the descent
3. Reserve for 30 min. of holding at 55% = 2 US gal (7.5 l)

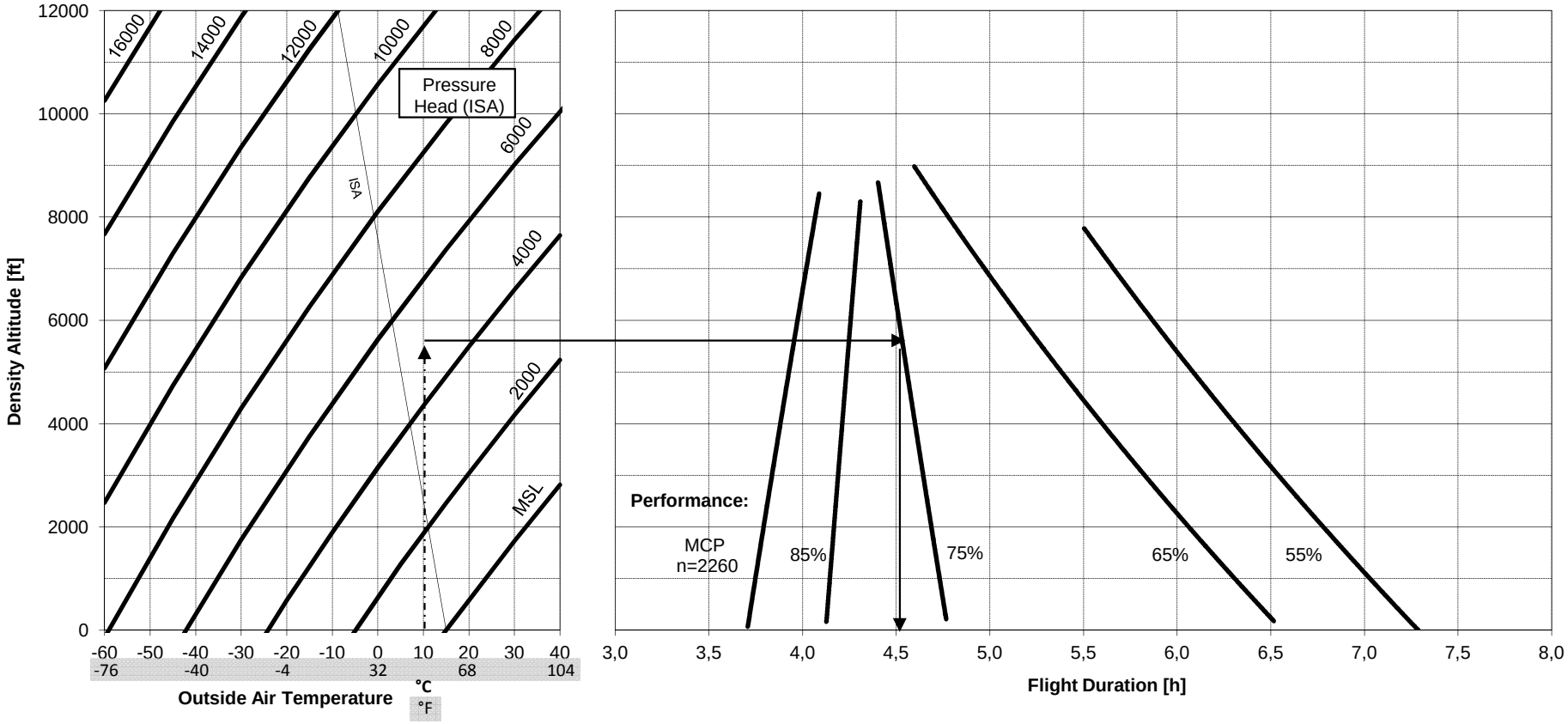

Example Pressure Altitude 5000 ft Density Altitude: 5600 ft Power Setting: 75% Endurance: 4.52 h = 4 h 31'
Outside Air Temperature: 50°F (+10°C)

5.2.11 Maximum Range

Condition:
Power setting: according to the table on page 5-11
Airplane mass: 1653 lbs (750 kg)
Flaps: UP

NOTE:
A not properly maintained engine and aircraft may considerably reduce the range of the airplane.

Fuel quantity: usable fuel 28.9 US gal (109.6 l)
The calculation of the range includes:
1. Fuel for engine start-up and taxiing: 0.5 US gal (2 l)
2. Fuel for take-off and climb to cruise altitude with max. continuous power as well as fuel for the descent
3. Reserve for 30 min. of holding at 55% = 2 US gal (7.5 l)

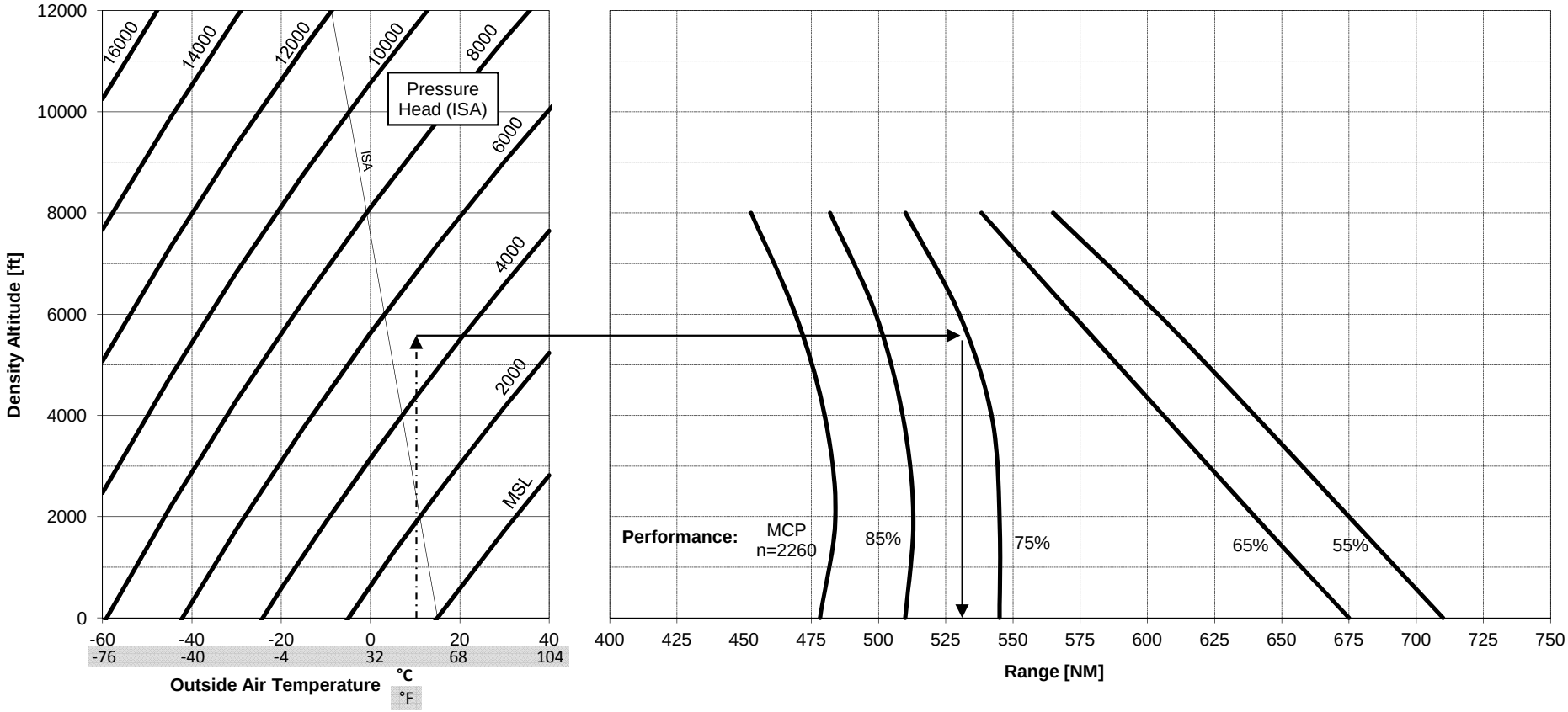

Example Pressure Altitude 5000 ft Density Altitude: 5600 ft Power Setting: 75% Range: 534 NM
Outside Air Temperature: 50°F (+10°C)

5.2.12 Descent: Fuel, Time and Distance

Process:
In descent follow a speed of 121 KIAS.
Set performance for a descent rate of 750 ft / min.
Keep the engine temperature in the green range.
If necessary, activate carburetor heat.

Conditions:
Manifold Pressure: as required. Approx. 15 in Hg
Speed of Rotation: 2000 rpm
Flaps: UP

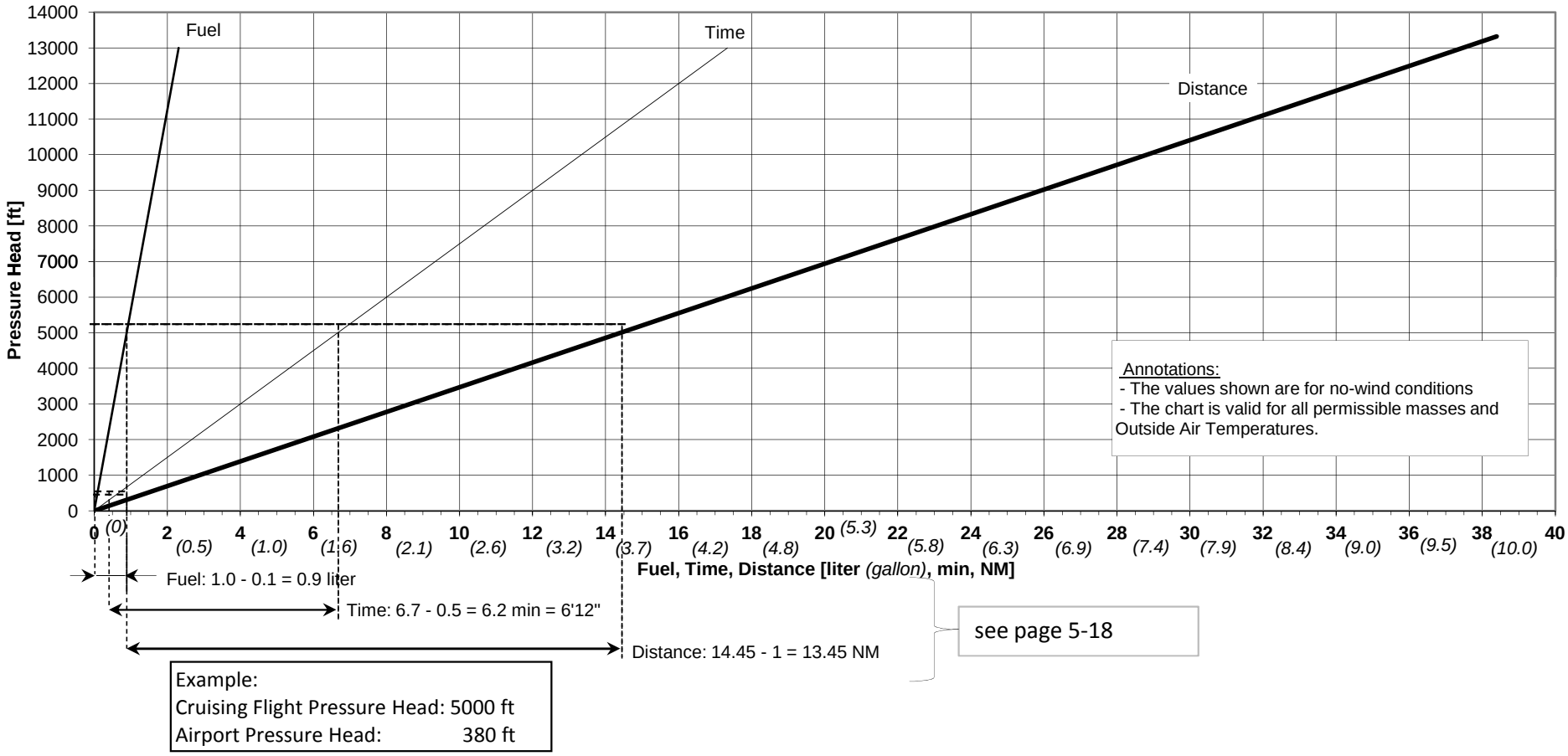

see page 5-18

Example:
Cruising Flight Pressure Head: 5000 ft
Airport Pressure Head: 380 ft

5.2.13 Landing Distance

Ldg Weight [lbs]([kg])	Airspeed [KIAS]	
	in 50 ft	Touchdown
1653 (750)	65	45
1323 (600)	65	43

NOTES:
- When landing on a dry, grass runway, increase the required landing distances by 15%.
- Increase ground roll appropriately for wet grass/ground, ice, snow and slush.
- An improperly maintained aircraft, deviating from procedures, poor meteorological and ambient conditions (rain, crosswind, wind shear etc.) may increase landing distances significantly.

Conditions:
Power setting: Idle
Propeller: Take-off (propeller control lever: HIGH-RPM position)
Flaps: LDG
Maximum brake application.
Paved, level and dry runway.

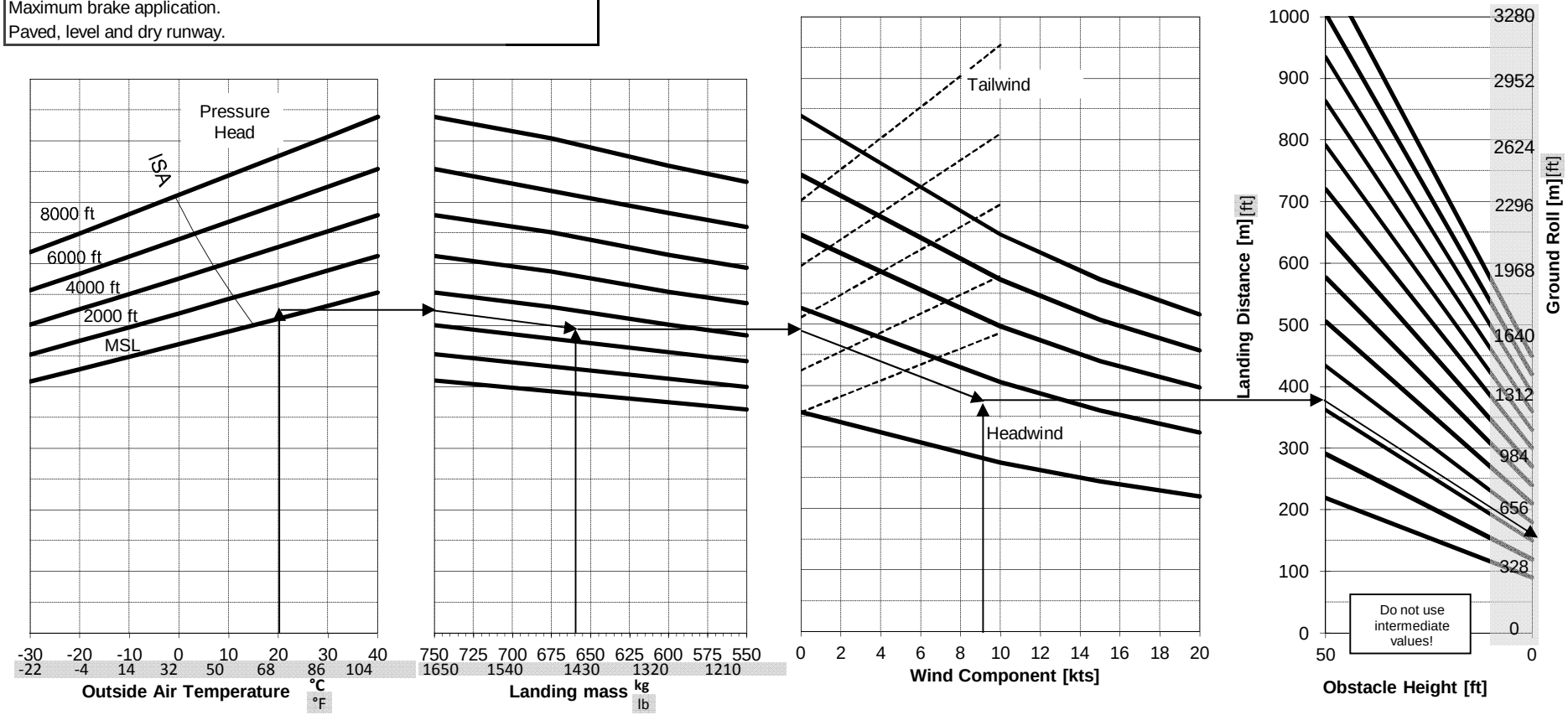

Example: Pressure altitude: 380 ft; Outside air temperature: 68°F (20°C); Landing mass: 1452 lbs (659 kg); Headwind component: 9 kts; Landing distance: 1230 ft (375 m); Ground roll: 525 ft (160 m)

5.2.14 Climb Performance after Balked Landing

Conditions:
Performance: full throttle
Rotation spees: 2385 rpm
Flaps: LDG
Speed: 55 KIAS

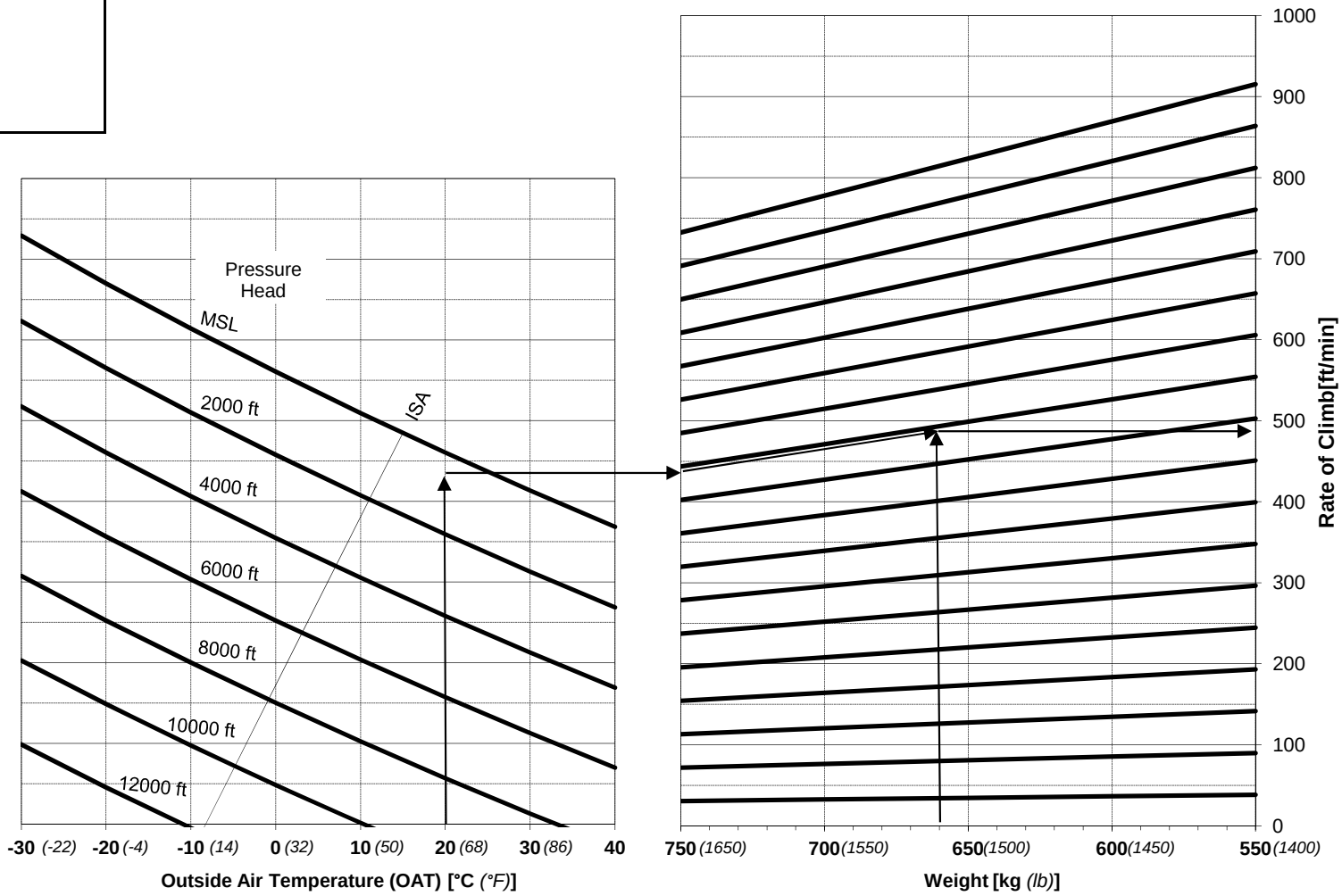

Example: Pressure Head 380 ft Weight 659 kg (1452 lb) Rate of Climb 490 ft/min
Outside Air Temperature +20°C (+68°F)

5.2.15 Flight Planning Example

The following contains a flight-planning example to demonstrate the use of the tables, charts and data presented in this section of the POH. The flight planning is based upon the following conditions:

Aircraft

Take-off weight: ..... 1587 lbs (720 kg)
Usable fuel: ..... 29 US Gal (109.6 ltr)
Wheel fairings installed

Conditions at the departure airfield

Pressure altitude: ..... 1800 ft
Temperature: ..... 64°F (18°C), 13°F (7°C) above ISA in 1800 ft
RWY direction: ..... 24 (240°)
Wind conditions..... 280°/10 kts
RWY length (paved, level and dry RWY) ..... 2040 ft (620 m)

Cruise conditions

Overall flight distance to destination ..... 480 NM (888 km)
Cruise altitude (altimeter setting 1013 hPa) ... 5000 ft
Temperature at cruise altitude . ..... 50°F (10°C), 9°F (5°C) above ISA in 5000 ft
Reported wind en-route ..... 10 kts tailwind component

Conditions at the destination airfield

Pressure altitude ..... 380 ft
Temperature ..... 68°F (20°C), 11°F (6°C) above ISA in 380 ft
RWY direction ..... 27 (270°)
Wind conditions..... 220°/15 kts
RWY length (dry and level grass RWY) ..... 2560 ft (780 m)

<u>TAKE-OFF DISTANCE</u>

Before using chart 5.2.5 on page 5-7 to determine the required take-off run and take-off distance, the crosswind component of the wind relative to runway direction must be obtained from chart 5.2.3 on page 5-5.

Relative to the runway heading, the wind is 40° from the right at 10 kts.

Using these values and chart 5.2.3, we obtain a headwind component of 8 kts and a crosswind component of 7 kts. .

We now have all the necessary data to determine the required take-off distances from chart 5.2.5:

Take-off ground roll.....202 m
Lift-off speed.....50 KIAS
Take-off distance over a 50 ft obstacle.....375 m
Airspeed in 50 ft.....57 KIAS

The required take-off distance is less than the available runway length (TODA) of 620m.

CLIMB

Using chart 5.2.7 a best rate-of-climb of 575 ft/min is determined for an aircraft with a take-off weight of 1587 lbs (720 kg) in 3000 ft at a temperature of 59 °F (15 °C).

Time needed and distance covered as well as fuel consumption for the climb may be calculated using chart 5.2.7.

Since take-off occurs at an altitude of 1800 ft, the values for climb to this altitude must be subtracted from the time required, distance covered and fuel consumption to the cruise altitude (5000 ft).

Since the outside air temperature is up to 13°F (7°C) above ISA, the values determined must be increased by 10%. For our example, we obtain the following:

Climbing time:.....(8.8 – 2.9) · 1.1 = 6.5 min = 6‘29“
Climbing distance:.....(10 NM – 3.2 NM) · 1.1 = 7.5 NM
Fuel needed:.....(4.7 ltr – 1.5 ltr) · 1.1 = 3.5 liters
(1.24 US gal – 0.4 US gal) · 1.1 = 0.924 US gal

The reported tailwind component of 10 kts at the cruise altitude also has an effect on the climb. However, it has no influence on climbing time and fuel consumption.

Since wind speed tends to increase with altitude, we will assume a tail wind of 7 kts for the entire climb.

During the climb, the tail wind acts on the aircraft for 6.5 minutes. As a result, we obtain for the covered distance over the ground during the climb segment:

$$7.5\,\text{NM} + \frac{7\,\text{kts} \cdot 6.5\,\text{min}}{60\,\text{min/h}} = 8.25\,\text{NM}$$

This result shows that the wind only has a small influence on climbing distance and is only of importance when large head or tail winds are present or when climbing to high altitudes. In this example, the wind influence on climbing distance could have been neglected.

CRUISE

Cruise altitude is chosen under consideration of flight distance, en-route winds and aircraft performance. In this flight-planning example, a typical cruise altitude and en-route wind condition has been chosen.

The range diagram 5.2.11 on page 5-13 shows the relationship between the engine power setting and the maximum achievable range. Lower power settings result in considerable fuel savings and thus greater achievable ranges.

Applying this chart to our example, a power setting of 75 % and a pressure altitude of 5000 ft give a maximum range of 534 NM at a true airspeed of 121 KTAS. The true airspeed at cruise was obtained from chart 5.2.8 on page 5-10 taking into account the atmospheric conditions (outside air temperature and chosen cruise pressure altitude) and the chosen power setting.

The maximum possible flight endurance is obtained from chart 5.2.10 on page 5-13. In our example, the maximum endurance is 4.52 hours at a power setting of 75 %. This maximum flight endurance and the maximum flight range determined above include 30 minutes of reserve at a power setting of 55 %, engine start-up/taxiing, take-off, climb, cruise, descent and landing.

Taking the reported tailwind of 10 kts in 5000 ft into account, the maximum achievable range of 534 NM must be corrected as follows:

Range with no wind	534,0 NM
Range increase due to 10 kts tailwind (4,52 h x 10 kts)	45,2 NM
	579,2 NM

This shows that, for a flight over a distance of 480 NM at a cruise power setting of 75 %, the fuel reserve is sufficient.

DESCENT

Chart 5.2.12 on page 5-14 is used to calculate time, distance and fuel consumption for the descent segment. In our flight-planning example, descent is initiated at cruise altitude (5000 ft) and ends at 380 ft. During descent, the altimeter setting must be adjusted to local QNH.

Descent duration:..... 6.7 min – 0.5 min = 6.2 min = 6‘ 12“
Descent distance:.....14.45 NM – 1.0 NM = 13.45 NM
Fuel required:... 0.26 US gal (1.0 ltr) – 0.03 US gal (0.1 ltr) = 0.23 US gal (0.9 ltr)

CALCULATION OF FUEL REQUIRED

Fuel required for engine start-up and taxiing	0.53 US gal (2.0 ltr)
(General Value, see remark "Fuel Quantity" on pg. 5-12 and 5-13)	
Fuel required for climb (page 5-18)	+0.92 US gal (3.5 ltr)
	1.45 US gal (5.5 ltr)

Climb distance (page 5-18)	7.5 NM
Wind correction (tailwind)	+ 0.7 NM
	8.2 NM

During the descent from 5000 ft to 380 ft, a distance of 13.45 NM is covered and 0.23 US gal (0.9 ltr) of fuel consumed (page 5-14). The influence of the wind has been neglected.

Overall flight distance	480.00 NM
Climb distance	- 8.20 NM
Descent distance	- 13.45 NM
Cruise section	458.35 NM

With the expected 10 kts tail wind, we obtain a (estimated) ground speed of:

121 kts + 10 kts = 131 kts

for the time spent in cruise we obtain:

$$\frac{458.35\ \text{NM}}{131\ \text{kts}} = 3.50\ \text{h} = 3\text{h}\ 30'$$

The fuel required for the cruise segment is:

3.50 h x 5.9 US gal/h (22.2 l/h) = 20.65 US gal (77.70 liters)

A fuel flow of 5.9 US gal/h (22.2 l/h) is calculated from the table on page 5-11 in the section for the power setting of 75 % MCP as follows:
With a temperature of 50°F (10°C) in 5000 ft, we obtain a density altitude of 5600 ft (refer to the tables on page 5-10 and 5-12).
To obtain the value for 5600 ft density altitude from the table on page 5-11, we need to interpolate between 5000 ft and 6000 ft. By using density altitude and not pressure altitude, we have already accounted for the deviation from ISA conditions. An additional correction, as shown on page 5-11, is no longer necessary as fuel consumption is already shown at density altitude.

The total amount of fuel required is calculated as follows:

Engine start-up, taxiing and climb	1.45 US gal (5.5 ltr)
Cruise	20.65 US gal (77.7 ltr)
Descent	0.23 US gal (0.9 ltr)
Total fuel required	22.33 US gal (84.1 ltr)

If we assume full tanks at take-off, the following reserve remains:

Amount of usable fuel	28.96 US gal (109.6 ltr)
Total fuel required	-22.33 US gal (84.1 ltr)
Fuel reserve:	6.63 US gal (25.5 ltr)

The actual ground speed of the aircraft must be regularly checked and tracked during flight as it forms the basis of our calculations. If, for example, the expected tailwind of 10 kts does not materialize, the power setting may have to be reduced to 65 % MCP to achieve the same range with the same amount of fuel.

LANDING DISTANCE

To determine the required landing distance use chart 5.2.13 on page 5-15. Once again use chart 5.2.3 on page 5-5 to determine the wind components relative to the runway.

Relative to the runway heading, the wind is 50° from the left at 15 kts. This gives a headwind component of 9 kts and a crosswind component of 12 kts.

The landing weight is:

Take-off weight	1587 lbs (720 kg)
Fuel burned	- 135 lbs (61.4 kg)
(84.1 ltr x 0,73 kg/l = 61.4 kg)	1452 lbs (658.6 kg)

Landing distance required over a 50 ft obstacle	1230 ft (375 m)
Addition for grass runway (dry: +15%)	1417 ft (432 m)
Ground roll	525 ft (160 m)
Addition for grass runway (dry: +15%)	604 ft (184 m)

The available runway length of 2560 ft (780 m) is sufficient.
The reported crosswind component is also below the maximum demonstrated crosswind component (15 kts.).

Sample Calculation:

Cruise altitude:	2000 ft
ISA temperature:	52°F (11°C)
Temperature in cruise altitude:	70°F (21°C), 18°F (10°C) above ISA in 2000 ft
Power setting:	65%
RPM:	2000 RPM
Manifold pressure for ISA (see chart):	24.7 in Hg
Manifold pressure calculated for ISA + 10°C:	24.7+ (24.7 x 0.03) =25.4 in Hg
Fuel consumption for ISA:	4.3 US gal/h (16 l/h)
Fuel consumption calculated for ISA + 10°C:	4.3 + (4.3 x 0.05) = 4.5 US gal/h (17 l/h)

5.3 NOISE CHARACTERISTICS / ABATEMENT

Certification basis	Actual (MTOW: 750kg / 1653 lbs)	Maximum Allowable
CS-36, Amendment 3	65.1 dB(A)	74.2 dB(A)
ICAO Annex 16, Chapter 10	65.1 dB(A)	74.2 dB(A)

The FAA has made no determination that these noise levels are acceptable or unacceptable for operations at any airport.

SECTION 6

WEIGHT AND BALANCE / EQUIPMENT LIST

		Page
6.1	INTRODUCTION	6-2
6.2	AIRCRAFT WEIGHING	2-3
6.3	WEIGHT AND BALANCE DATA	6-4
6.3.1	Weight and Balance Record	6-6
6.4	DETERMINING WEIGHT AND BALANCE FOR FLIGHT	6-7
6.4.1	Load moment determination (loading graph)	6-8
6.4.2	Weight and Moment Determination	6-9
6.4.3	Approved Center of Gravity Range and Moment Limits	6-10
6.5	EQUIPMENT LIST	6-11
6.5.1	Current Equipment List of the Aircraft	6-12

6.1 INTRODUCTION

Before delivery, the manufacturer determines the basic empty weight and moment as well as the empty C.G. location for each aircraft. This data is documented in the Weight and Balance Record in section 6.3.1 of this section. The certified empty C.G. limits can be found the Maintenance Manual.

It is the operator's responsibility to document any changes to the empty weight and center of gravity of the aircraft.

The aircraft is to be weighed in the following configuration

Weighing configuration:

a) Aircraft with: Brake fluid
Engine oil (3.17 US qt / 3 liters)
Engine coolant (2.64 US qt / 2.5 liters)
Unusable fuel (2.74 US Gal / 10.4 liters)

b) Equipment in accordance with the current equipment list (section 6.5)

NOTE

The aircraft must be weighed in accordance with the relevant aviation regulations at regular intervals or after repairs, after extensive maintenance, after large portions of the aircraft have been painted, after changes to the equipment or when doubt exists as to the accuracy of the last weighing. This data must then be recorded in the Weight and Balance Record.

It is the pilot's responsibility to operate the aircraft within its weight and balance limits.

The aircraft must be flown at a weight and a center of gravity position (C.G.) that are within the approved operating ranges, as defined in this section, to guarantee safe operation, the specified performances and the flight characteristics. The shift in C.G. location due to fuel burn during flight must be taken into account.

The C.G. Limits are defined in section 6.4.3.

6.2 AIRCRAFT WEIGHING

Reference Datum (BE): Leading edge of wing root rib

Horizontal reference line: Place a wedge (800 : 77) 63 in (1600 mm) ahead of the leading edge of the horizontal stabilizer. Place a level on the wedge and level the aircraft.

Lever D_B: Distance from nose wheel to Reference Datum (BE)

Lever D_L, D_R: Distance from main wheel to Reference Datum (BE)

Lever D_{SL}: Distance of C.G. to Reference Datum (BE)

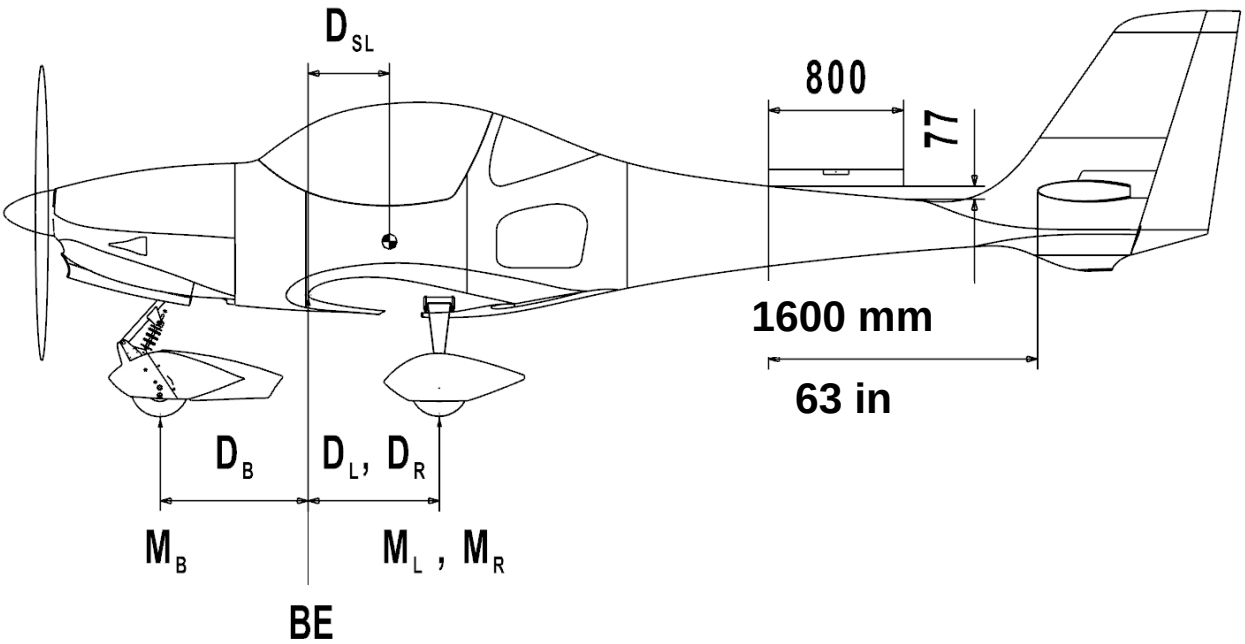

Aircraft Weighing: Example in [kg, m]					
Position	Weight [kg]	*	Lever [m]	=	Moment [kg*lb]
Nose Wheel	m_B = 106	*	D_B = - 0,840	=	M_B = - 89
Left Main Wheel	m_L = 200	*	D_L = + 0,780	=	M_L = + 156
Right Main Wheel	m_R = 200	*	D_R = + 0,780	=	M_R = + 156
Total	m_{Ges} = 506				M_{Ges}= 223
Center of Gravity	M_{Ges} / m_{Ges}	=	D_{SL} = 0,440		

Aircraft Weighing: Example in [lb, in]					
Position	Weight [lb]	*	Lever [in]	=	Moment [in*lb]
Nose Wheel	m_B = 234	*	D_B = - 33	=	M_B = - 7722
Left Main Wheel	m_L = 441	*	D_L = + 30.7	=	M_L = + 13539
Right Main Wheel	m_R = 441	*	D_R = + 30.7	=	M_R = + 13539
Total	m_{Ges} = 1116				M_{Ges}= 19356
Center of Gravity	M_{Ges} / m_{Ges}	=	D_{SL} = 17.34		

CAUTION

Sign Convention:

The lever arms of the main landing gear wheels, D_L and D_R, have a positive (+) value and that of the nose gear, D_N, a negative (-) one.

6.3 WEIGHT AND BALANCE DATA

The current empty weight and C.G. Location must be added to the Weight and Balance Record on page 6-6 and signed off by an authorized person. It is important that the Weight and Balance Record be complete and up to date. The first entry in the record is made during the conformity inspection at the end of the manufacturing process.

NOTE

The pilot uses the empty weight C.G. as the basis for all weight and balance calculations for flight.

It is possible to calculate a new empty weight and C.G. if the changed weights and corresponding levers are known (for example, a change in equipment). If, however, the changed weights and corresponding levers are not known (for example, after repair work) a new weighing will need to be completed.

If the empty weight and C.G. are to be calculated, it is important that current information is being used.

NOTE

The current aircraft weighing report is to be included as page 6-5 of this POH. Previous weighing reports must be clearly marked as such or removed.

Replace with current Aircraft Weighing Report

6.3.1 Weight and Balance Record

AQUILA AT01				Registration Sign:				S/N:		Page:	
				Mass, Lever, Moment of change acc. to wing leading edge (BE)				empty weight and centre of gravity of the airplane		authorized staff	
Date	IN	OUT	description of the change	in flight direction aft of BE: (+) front of BE: (-)	single-mass	lever of single mass	moment of single mass	empty weight	center of gravity (D_{SL})	signature	stamp
				„+" or „-"	[kg] or [Lb]	[m] or [in]	[kgm] or [lb in]	[kg] or [Lb]	[m] or [in]		
			at delivery								

6.4 DETERMINING WEIGHT AND BALANCE FOR FLIGHT

In order to operate the aircraft within the approved weight and C.G. limits, the take-off weight and the flight C.G. position must be determined, taking into consideration the loading for the planned flight.
Use the tables and charts provided in sections 6.4.1 through 6.4.3 to determine weight and C.G. position:

Section 6.4.1 Load moment determination (loading graph)

Section 6.4.2 Weight and moment determination

Section 6.4.3 Approved center of gravity and weight limits

Proceed as follows:

1. Take the basic empty weight m_{empty} and the empty weight moment MO_{empty} from the current Aircraft Weighing Report or the Weight and Balance Record and enter them into the appropriate fields of Table *6.4.2 Weight and Moment Determination*.

2. Using chart *6.4.1 Loading Graph* determine the moments of the load (pilot, fuel, baggage, etc.). Enter this information, as well as their weight, into the appropriate fields of Table *6.4.2 Weight and Moment Determination Table*.

   Alternatively, the moments can be calculated with the lever arms from Table *6.4.2 Weight and Moment Determination Table.*

3. Find the sum of the weights and the moments in their columns. Transfer this information into chart *6.4.3 Approved C.G. Range and Moment Limits* to check if the current C.G. is within limits.

6.4.1 Load moment determination (loading graph)

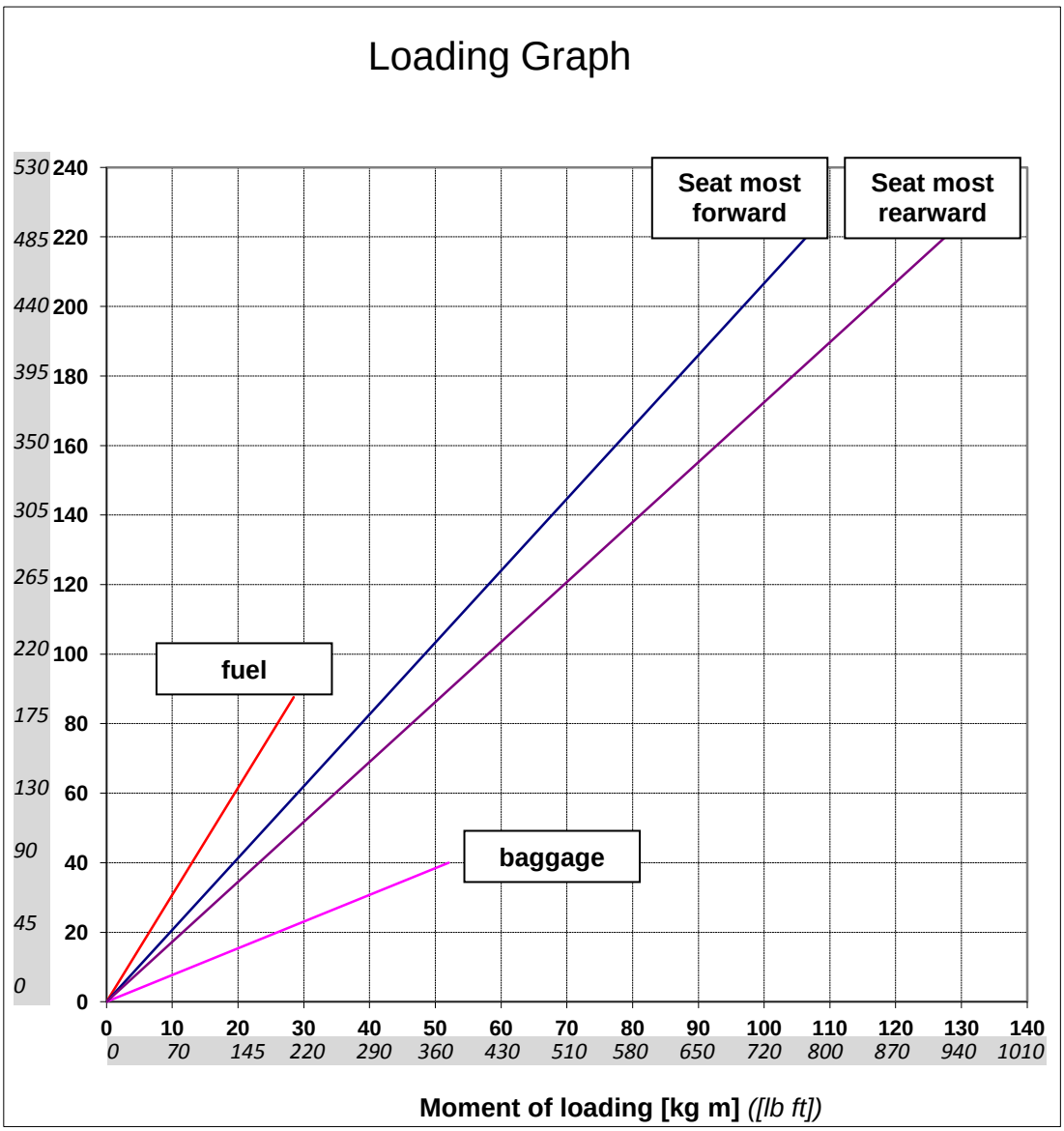

NOTE

When determining the C.G. position, the fact that the seat is adjustable must be taken in to consideration. The moments for the forward and the aft seat positions are shown, the moments for all other positions must be interpolated

6.4.2 Weight and Moment Determination

Calculating Loading Condition	**Lever from leading edge of wing root rib (BE) [in]** *[m]*	**Aquila AT01 Example**		**Registration No.:**	
		Weight [lb] *[kg]*	**Moment [in lb]** *[m kg]*	**Weight [lb]** *[kg]*	**Moment [in lb]** *[m kg]*
EMPTY WEIGHT (from Table 6.3.1)	D_{SL} = Exp.: **17.3 in** *(0.440 m)*	**1116** *506*	**19309** *223*		
PILOT	**19.1** *(0.484)* (seat forward) **22.8** *(0.580)* (seat aft)	**121** *55*	**2311** *27* (seat forward)		
PASSENGER	**19.1** *(0.484)* (seat forward) **22.8** *(0.580)* (seat aft)	**220** *100*	**4609** *53* (seat middle)		
BAGGAGE	**51.2** *(1.3)*	**33** *15*	**1690** *20*		
Weight & Moment without fuel		**1490** *676*	**27919** *323*		
usable FUEL (**6.01 lb / US gal**) *(0.72 kg / l)*	**12.8** *(0.325)*	**159** **(= 26,5 gal)** *72* *(= 100 ltr)*	**2035** *23*		
Total Weight & Moment		**1649** *748*	**29954** *346*		

Explanation:

- Transfer the empty weight and the empty C.G. (D_{SL}) from section 6.3.1 or from the current Aircraft Weighing Report.
- Add all the weights
- Transfer the moments from chart 6.4.1 or calculate the moments by multiplying the weight with the arms.
- Find the sum of the weights and moments
- Plot the total weight and moment in the *Center of Gravity Range and Moment Limits diagram 6.4.3*.

The flight C.G. from the example is **29954 in lb / 1649 lb = 18.2 in** (limit range: 16.8 – 20.6 in) respectively *346 kgm / 748 kg = 0,463 m* (limit range: 0,427 – 0,523 m) aft of the datum and is within the limits.

6.4.3 Approved Center of Gravity Range and Moment Limits

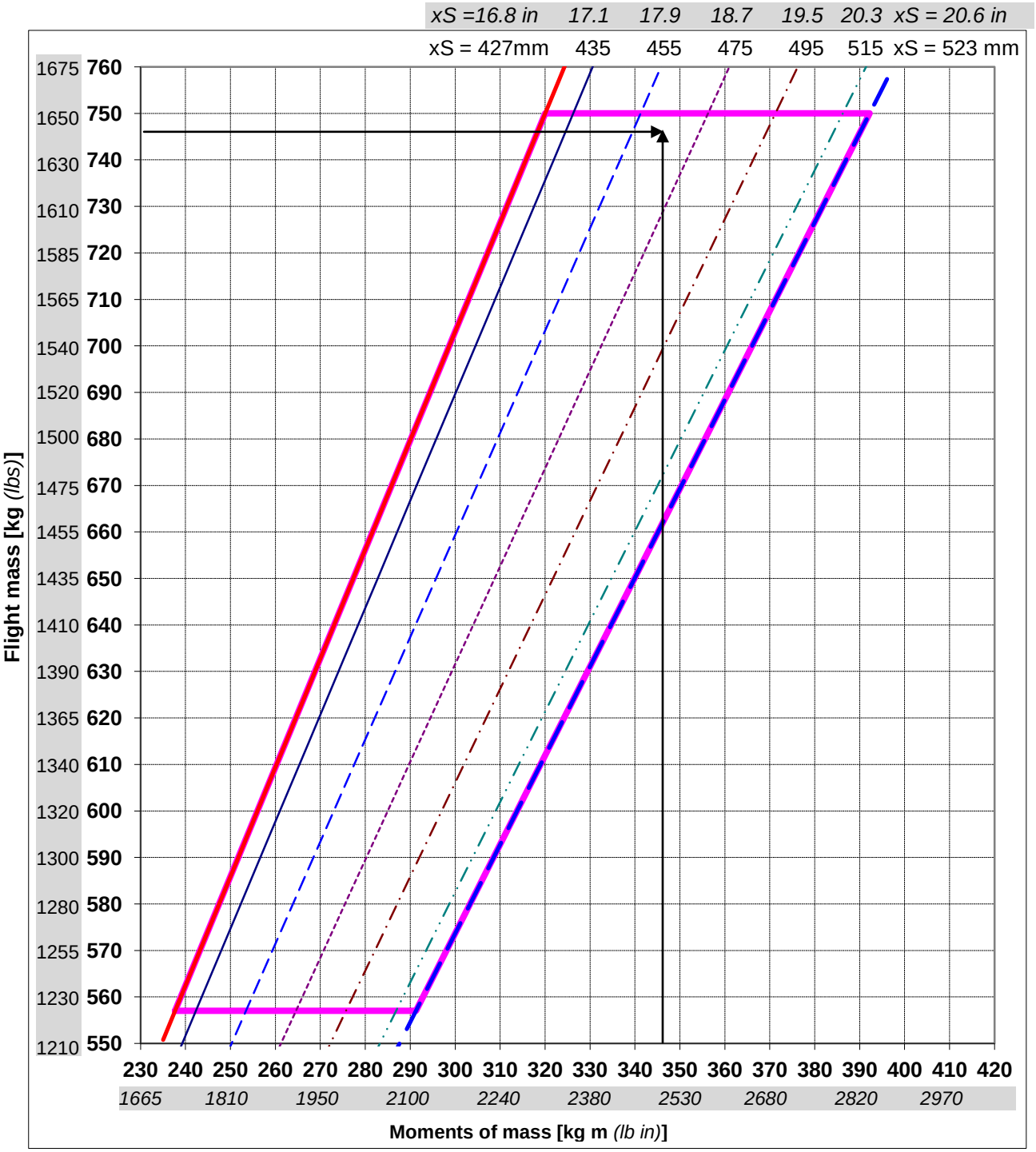

6.5 EQUIPMENT LIST

The equipment list includes all avionic systems, instruments and other equipment installed in the aircraft.

All changes to the equipment of this aircraft must be documented in the equipment list in this handbook. It must be kept up to date and reflect the current equipment status.

The equipment list in this handbook contains the following information:

1. Designation/Description, Manufacturer, model or P/N and S/N of the avionic system, instrument or other equipment.

2. Indication of the installation location OR lever arm in [in] from the reference datum. Positive lever arms indicate locations behind the reference datum and negative lever arms indicate locations in front of the reference datum.

NOTE

The installation of additional equipment or a change in installed equipment, must be carried out in accordance with the data provided in the Maintenance Manual. The retrofitting of equipment must be conducted in accordance with the applicable Service Bulletin. When in doubt, the type certificate holder or the production organization of AQUILA Aviation should be contacted.

After every change to the aircraft that could cause the empty weight or moment to change (for example, the installation or removal of equipment), the empty weight and C.G. (D_{SL}) need to be redetermined. The change also needs to be documented in an *Aircraft Weighing Report* and in the *Weight and Balance Record* in section 6.3.1.

It may be possible to calculate the empty weight and C.G. if the new weights and levers are known. Otherwise a new weighing will need to be completed.

The new C.G. must lie within the limits (refer to Maintenance Manual, MM-AT-01-1020-110).

6.5.1 Current Equipment List of the Aircraft

AQUILA AT01-100		**Registration:**		**S/N: AT01-100B-**	
***)**	**Designation / Description**	**Manufacturer**	**Model / P/N**	**S/N**	**Installation Location **)**

*) Mark where applicable

**) Describe installation location or enter lever arm from reference datum in [in] (keep algebraic sign of lever arm in mind)

AQUILA AT01-100		**Registration:**		**S/N: AT01-100B-**	
***)**	**Designation / Description**	**Manufacturer**	**Model / P/N**	**S/N**	**Installation Location **)**

*) Mark where applicable

**) Describe installation location or enter lever arm from reference datum in [in] (keep algebraic sign of lever arm in mind)

[intentionally left blank]

SECTION 7

DESCRIPTION OF THE AIRCRAFT AND ITS SYSTEMS

		Page
7.1	INTRODUCTION	7-3
7.1.1	Garmin G-500 (Primary Flight Display)	7-3
7.2	AIRFRAME	7-4
7.3	FUESELAGE	7-4
7.4	WING	7-4
7.5	EMPENNAGE	7-5
7.6	FLIGHT CONTROLS	7-5
7.6.1	Ailerons	7-5
7.6.2	Elevator and Trim System	7-5
7.6.3	Rudder	7-6
7.6.4	Flaps and Flap Position Indication	7-6
7.7	INSTRUMENT PANEL	7-7
7.7.1	Overview Control Panel	7-8
7.7.2	Cabin Heat	7-8
7.7.3	Cabin Ventilation	7-8
7.8	SEATS, SEATBELTS AND HARNESSES	7-9
7.9	BAGGAGE COMPARTMENT	7-9
7.10	CANOPY	7-9
7.11	UNDERCARRIAGE	7-10
7.11.1	Nose Landing Gear and Nose Wheel Steering	7-10
7.11.2	Main Landing Gear and Brake System	7-10
7.11.3	Parking Brake	7-10
7.11.4	Wheel Fairings	7-11

7.12	POWER PLANT	7-12
7.12.1	Engine	7-12
7.12.2	Propeller	7-12
7.12.3	Throttle and Propeller Control	7-13
7.12.4	Choke	7-14
7.12.5	Carburetor Heat	7-14
7.13	FUEL SYSTEM	7-15
7.13.1	Overview	7-15
7.13.2	Fuel Tank	7-16
7.13.3	Fuel Selector / Shut-Off Valve	7-16
7.13.4	Fuel Level Indication	7-17
7.14	ELECTRICAL SYSTEM	7-18
7.14.1	Power Supply and Battery System	7-18
7.14.2	Ignition System and Starter	7-18
7.14.3	Electrical Equipment and Circuit Breakers	7-20
7.14.4	Voltmeter and Ammeter	7-20
7.14.5	Warning Light ALT 1	7-20
7.14.6	Warning Light FUEL	7-20
7.14.7	Engine Instruments and Fuel Level Indicator	7-21
7.14.8	External Power Unit	7-21
7.15	PITOT-STATIC SYSTEM	7-22
7.15.1	Pitot Heat	7-22
7.16	STALL WARNING SYSTEM	7-23
7.17	AVIONICS	7-23

7.1 INTRODUCTION

Section 7 of the Pilot's Operating Handbook contains a description of the entire aircraft and its systems, including the integration of the GARMIN G500 systems as well as information related to their use.

Refer to Section 9 for the description and operating instructions of optional equipment and systems.

NOTE

A more in depth description and the user manuals of the GARMIN G500 can be found in the documents published by the manufacturer, GARMIN G 500 Pilot's Guide.

7.1.1 Garmin G500 (Primary Flight Display)

The GARMIN G500 has 2 displays, the PFD and the MFD. Together they form the Garmin Display Unit (GDU). In addition, the GDU has an Attitude and Heading Reference System (AHRS unit) and an Air-Data Computer (ADC unit).

The GARMIN G500 system is organized as shown in the following illustration.

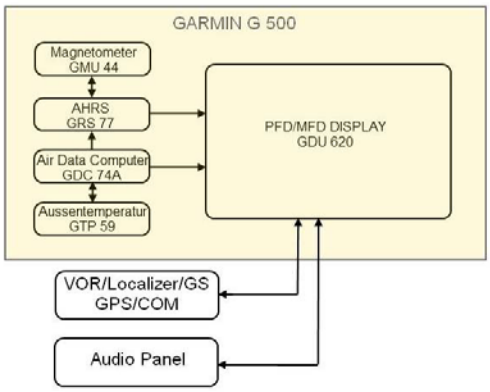

The GDU is attached to the aircraft power supply through a push-pull type circuit breaker. The circuit breaker is located on the right side of the instrument panel and is labeled **PFD**.

The AHRS unit and the magnetometer are attached to the power supply through their own push-pull circuit breaker. The circuit breaker is located on the right side of the instrument panel and is labeled **AHRS**. The AHRS unit is located under the right half of the baggage compartment floor. The AHRS is attached to the GDU with its own wiring harness.

The ADC and the OAT probe are also protected with a push-pull circuit breaker. The circuit breaker is also located on the right side of the instrument panel and is marked with **ADC**.

Current flows through all 3 circuit breakers as soon as the **ALT1 / BAT** switch has been turned on.

7.2 AIRFRAME

The Aquila AT01-100 is a modern single engine two seater in a side-by-side configuration. Due to its high useful load, roomy cockpit, large baggage compartment, good cruise performance and light yet incredibly sturdy airframe, the Aquila is not only a great aircraft for longer tours but also an ideal training platform.
The aircraft is a low wing configuration with a mid mounted horizontal stabilizer.
With the exception of the landing gear, the engine mount, and a few fittings the Aquila AT01-100 is built entirely of composite material. Most components are fabricated using glass-fiber-reinforced plastic (GFRP), with carbon-fiber-reinforced plastic (CFRP) being employed where extra strength is required.

7.3 FUSELAGE

The fuselage and the vertical stabilizer are fabricated in two half shells. While the fuselage portion of the shell is fabricated from solid fiberglass laminate, the vertical stabilizer portion has a sandwich structure.
On the engine side the firewall, which is made of a GFRP/CFRP sandwich, is covered with a special fire-resistant ceramic fleece and a stainless steel sheet.
The landing gear frame, together with the seat frame, supports the main landing gear struts. The frame continues upwards and forms a massive roll cage made from GFRP and CFRP.

7.4 WING

The wing is designed with a triple trapezoid planform and a swept-back leading edge. The wing is fastened to fuselage from below using 4 bolts.
The wing shells are GFRP/foam sandwich composite constructions and are reinforced locally by CFRP unidirectional bands.
The fuel tanks are integrated into the leading edge of the wing structure. The 2 fuel tanks, one on each side, have a volume of approx. 15.8 US gal (60 l) each. The inner surface of the fuel tank is sealed with a special surface lining to protect the wing structure from damage.
The position lights, ACL (Anti-Collision Light) and the fuel tank vents are integrated into the winglets.

7.5 EMPENNAGE

The vertical and horizontal stabilizers, as well as the elevator and rudder are semi-monocoque sandwich composite constructions. The shells are fabricated from a GFRP sandwich reinforced by carbon fiber bands.
The horizontal stabilizer assembly is bonded directly to the fuselage and cannot be removed.

7.6 FLIGHT CONTROLS

The flight controls of the Aquila AT01-100 are of conventional design using a control column and non-adjustable rudder pedals. The elevator and ailerons are controlled via push-pull-rods, the rudder via cables.

The flaps and the trim system are electrically actuated.

7.6.1 Ailerons

The ailerons are controlled using push-pull-rods.

A bell crank in the middle of the main wing spar sets the differentiation of the ailerons. Adjustable stops near the control column are used to limit the aileron deflection.

7.6.2 Elevator and Trim System

The elevator is controlled using push-pull-rods.

Adjustable stops near the control column are used to limit the elevator deflection.

The trim system is an electrically actuated spring trim. Even in a situation such as trim runaway, the aircraft remains controllable, though the stick forces may become somewhat higher. The trim is controlled by a spring-loaded switch. The trim indicator is located in the middle of the instrument panel.

The take-off position of the trim is marked on the indicator.

Switch forward:	nose down
Switch aft:	nose up

In addition, the trim system is protected by a resettable circuit breaker.

7.6.3 Rudder

The rudder is controlled by the rudder pedals by way of cables running in special guides. The control surface travel is limited by stops at the lower rudder attachment fitting.

Precise control and good maneuverability during taxiing on the ground is accomplished by linking the nose wheel steering mechanism directly with the rudder pedals. Differential breaking may be used to further reduce the turning radius.

The seat can easily be adjusted to allow the pilot to comfortably reach the rudder pedals.

7.6.4 Flaps and Flap Position Indication

The flaps are driven by an electric motor, via a spindle and push-pull-rods.

A three-position selector switch is incorporated in the instrument panel for flap operation. A flap position indicator is also located on the instrument panel.

In cruise position the upper green light is illuminated (UP)

In take-off position the middle green light is illuminated (T/O)

In landing position the lower green light is illuminated (LDG)

The flap selector switch position corresponds accordingly to the flap position.

Stripe markings on the flap leading edge offer an additional possibility to visually check the flap position.

A self locking spindle will maintain a flap position, even in the event on an electrical failure.

7.7 INSTRUMENT PANEL AT01-100B (sample)

NOTE:
The actual installation may differ depending on certified changes or complementary equipment.

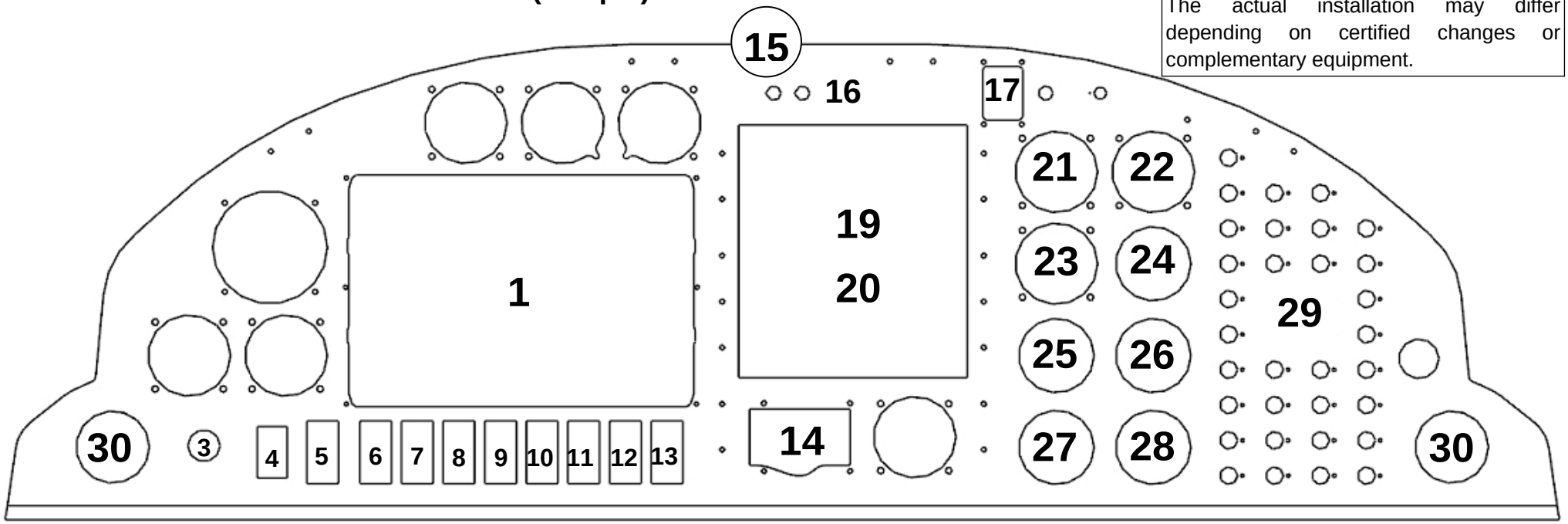

For minimum instrument requirements, refer to Section 2.12 of this manual

No.	Description	No.	Description	No.	Description	No.	Description	No.	Description	No.	Description
1	GARMIN G500	6	Avionics	11	P/S Heat (opt.)	16	Warning Lights	21	Manifold Press. Indicator	26	Oil Temp. Indicator
2	Not Occupied	7	Nav-Light	12	Reserved	17	ELT	22	RPM-Indicator (Prop.)	27	Ammeter
3	Ignition Switch	8	ACL	13	Reserved	18	Not Occupied	23	Fuel Level Indicator	28	Oil Pressure Indicator
4	ALT1/BAT	9	Landing Light	14	Flap Control Switch	19	COM/NAV/GPS	24	Cyl. Head Temp. Indicator	29	Circuit Breakers
5	Fuel Pump	10	Instrument Light (opt)	15	Compass	20	Transponder	25	Voltmeter	30	Ventilation Nozzle

7.7.1 Overview Control Panel

Controls and displays located on the control panel which is located below the midsection of the instrument panel, are placed so as to be easily viewed and operated from both seats.

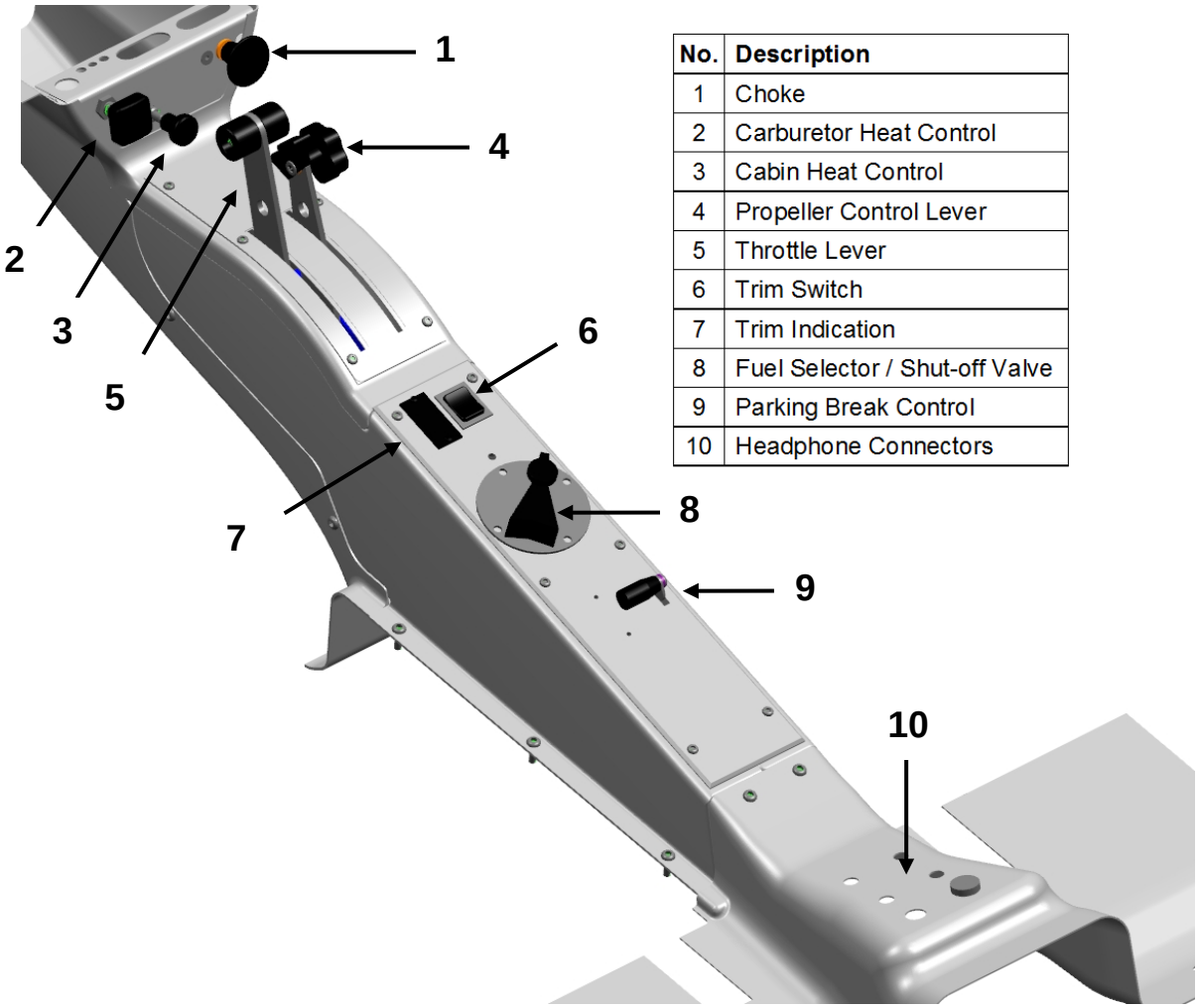

No.	Description
1	Choke
2	Carburetor Heat Control
3	Cabin Heat Control
4	Propeller Control Lever
5	Throttle Lever
6	Trim Switch
7	Trim Indication
8	Fuel Selector / Shut-off Valve
9	Parking Break Control
10	Headphone Connectors

7.7.2 Cabin Heat

The cabin heat control knob, by which the hot-air flap is opened and closed, is located in the forward section of the control panel.
At the front section of the instrument panel cover the heated air is divided up for windshield defrosting and cabin heating.

7.7.3 Cabin Ventilation

Two adjustable ventilation nozzles are located on both sides of the instrument panel to supply fresh air to the cabin. The amount and direction of fresh airflow can be adjusted individually for each seat by pivot-mounted nozzle outlets. If required, the sliding windows in the canopy may also be opened for additional ventilation of the cabin

7.8 SEATS, SEATBELTS AND HARNESSES

The seats of the AQUILA AT01-100 are fabricated from composite materials and are equipped with integrated head rests and removable, energy-absorbing seat cushions.
An oil/gas spring strut with locking mechanism holds the seat in the adjusted position. To adjust the seating position, the spring strut must be unlocked by pushing a handle located by your thigh.

Both seats are equipped with four-part seat belts with a central rotary buckle. The shoulder harnesses are connected to inertial reels.

To fasten the seat belts, put each belt fitting successively into the associated receptacles of the rotary buckle until a distinctive "snap" sound is heard. The seat belts can be released by turning the handle of the rotary buckle clockwise.

7.9 BAGGAGE COMPARTMENT

The AQUILA AT01-100 incorporates a large baggage compartment behind the seats which can be loaded through a lockable baggage door. The baggage compartment is also accessible through the cabin.

The maximum permissible load in the baggage compartment is **88 lbs (40 kg)**. The weight and centre of gravity limits of the aircraft (refer to Section 6 of this handbook) must be observed when loading. The baggage door must be locked during flight.

Tie-down rings for straps are provided on the floor panels of the baggage compartment to strap down baggage and other payload. Suitable tie-down straps may be purchased from the aircraft manufacturer. For small or loose articles, a baggage net is recommended, which is also available for purchase.

7.10 CANOPY

The large canopy of the AQUILA AT01-100 offers an excellent all around view and allows unrestricted access to the cabin. Small sliding windows on both sides of the canopy serve as emergency view windows and can be used for additional cabin ventilation. The canopy is operated by a hand lever located on the left hand side of canopy frame. A gas spring strut adds support while opening the canopy.

7.11 LANDING GEAR

The landing gear consists of a steerable nose gear that is equipped with a shock absorber and a main landing gear. To provide precise control of the aircraft while taxiing on the ground, the nose gear strut is linked directly to the rudder pedals. The main gear struts are made of spring steel to absorb the touch-down loads during landing. Hydraulically actuated disc brakes are provided on the main landing gear.
Because of the robust landing gear and the 5.00 x 5 wheels on the nose and main wheels the AQUILA AT01-100 can be easily operated from a grass surface.
The aircraft can be operated with full size wheel pants or, for soft field operation, mud guards.

7.11.1 Nose Landing Gear and Nose Wheel Steering

The direct linkage between nose wheel and rudder pedals minimizes brake wear.

Good shock absorption and suspension characteristics are provided by a shock absorber made of stacked rubber springs located in the nose wheel fork.

The direct linkage between the nose wheel steering and rudder operation allows swift taxiing, precise taxi maneuvers and small turn radii, also in crosswind conditions without excessive braking.

Differential breaking may be used to reduce the turning radius even further.

7.11.2 Main Landing Gear and Brake System

The main landing gear consists of two cantilever struts which act as leaf-springs to absorb the touch-down loads.

The main wheels are equipped with hydraulically actuated disc brakes. The brakes are activated individually on each side by tilting the corresponding rudder pedal in the cockpit forward with the toe. Due to separate brake circuits, the left and right wheel brakes can be actuated individually.

7.11.3 Parking Brake

The parking brake lever is located in the central control panel. Actuating the parking brake locks the main wheel brakes.

To set the parking brake, the wheel brakes are applied simultaneously with the rudder pedals and, when the desired brake pressure is achieved, the control lever is pulled into the locked position.
To release the parking brake, push the parking brake lever all the way forward.

7.11.4 Wheel Fairings

It is important that no dirt or snow accumulate underneath the wheel pants. For this reason the Aquila AT01-100 can be operated with either full wheel pants (high-speed), with mud guards (soft-field), or without any wheel fairings. The aircraft can also be flown with a combination of wheel fairings, as long as the left and right main wheels have the same fairing.

NOTE

Flying without any kind of wheel fairing increases the chance of damage due to stones which, in turn, may lead to extensive, unscheduled maintenance work.

NOTE

Flying without any wheel fairings or with mud guards reduces performance up to 10%.

7.12 POWER PLANT

7.12.1 Engine

The ROTAX 912S is a 4 cylinder, 4 stroke horizontally opposed engine with liquid-cooled cylinder heads and air-cooled cylinder barrels. It has brushless magnetos, 2 carburetors, a mechanical fuel pump, a reduction drive, an integrated alternator (**ALT2**), an alternator (**ALT1**) and an attachment for a hydraulic constant speed propeller.

Reduction ratio of internal gearbox:	2.43 : 1		
Displacement:	82.5	in^3	(1352 cm^3)
max. takeoff power (5 min.):	98.6	BHP	(73.5 kW)
at max. takeoff propeller speed:	2385	RPM	
max. continuous power:	92.5	BHP	(69.0 kW)
at max. continuous propeller speed:	2260	RPM	

Other information can be found in the engine handbook.

7.12.2 Propeller

A two-blade, hydraulically controlled variable pitch propeller (constant speed propeller) of wood-composite-hybrid construction.

Manufacturer:	mt-Propeller	
Type:	MTV-21-A/170-05	
Diameter:	66.9 in	(170 cm)

The propeller blades are wrapped in composite material and protected along the leading edge by a stainless steel sheath. Near the blade root, the propeller is protected additionally by a thick plastic film.

7.12.3 Throttle and Propeller Control

The black throttle lever and the blue propeller control lever are located on the central control panel.

The throttle controls the manifold pressure (MP):

Throttle forward:	Full throttle (high MP)
Throttle aft:	Idle (low MP)

The propeller control lever controls the pitch of the propeller blades:

Propeller control lever forward:	Low pitch (high RPM)
Propeller control lever aft:	High pitch (low RPM)

To obtain maximum engine power (max. manifold pressure), place both the throttle and the propeller control levers in their full forward positions.

During climb and cruise, the manifold pressure (throttle position) and the propeller pitch (propeller control lever position) are normally matched to each other. Refer to Section 5 of this manual and to ROTAX® 912S Operator's Manual for more information.

During the final approach for landing, the low pitch setting of the propeller is used to increase the propeller drag at low power settings and to have full climb power available in case of a missed approach (throttle aft and propeller control lever forward).

The adjustment of the propeller blade pitch is accomplished by a hydraulically operated propeller governor that increases the pitch against a spring load. The oil-hydraulic governor keeps the preselected propeller speed at a constant value regardless of manifold pressure and airspeed (constant-speed control). In the case of oil pressure loss, the blades will be automatically set into lowest pitch position. This ensures the further availability of full power.

CAUTION

In the case of governor loss, the propeller behaves like a non-adjustable propeller. Manifold pressure is set to ensure that max. permissible RPM is not exceeded.

The propeller does not have a feathered position.

7.12.4 Choke

The choke control knob is located on the control panel to the right of the carburetor heat and cabin heat controls.

The choke may only be used for a short time when starting the engine in cold conditions. The throttle must remain in Idle. The choke knob is spring-loaded and returns to the OFF position when released.

7.12.5 Carburetor Heat

The carburetor heat push-pull type control element is located on the control panel to the left of the choke and cabin heat.

The correct use of carburetor heat prevents the formation of carburetor ice that can cause the engine to run rough and, in the worst case, complete engine failure. If carburetor icing is encountered, it is usually possible to slowly melt the ice by activating the carburetor heat while maintaining the same power setting.

A carburetor temperature gauge with a caution zone marked is available from the manufacturer as optional equipment.

The functionality of the carburetor heat should be tested before every flight.

NOTE

Carburetor heat reduces engine power and must be used in accordance with standard rules and procedures.

7.13 FUEL SYSTEM

7.13.1 Overview

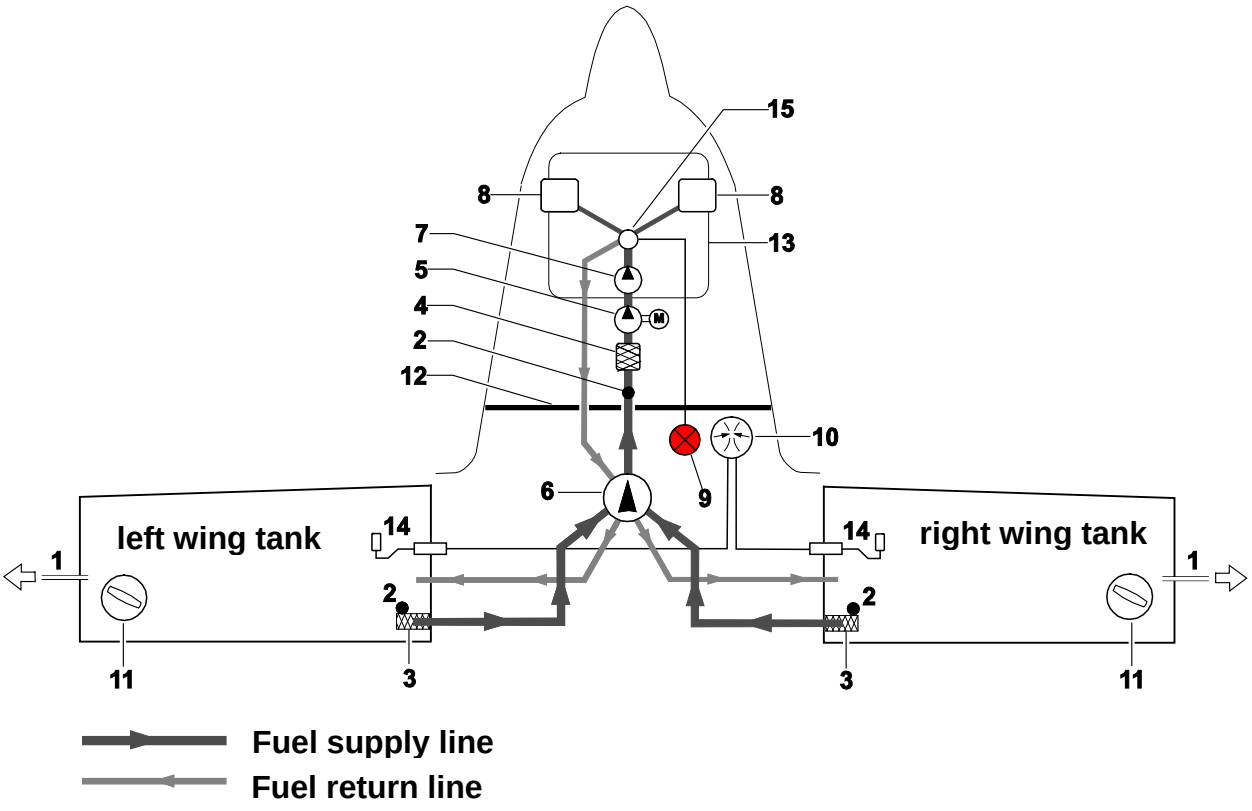

1	Fuel Vent	8	Carburetor
2	Drain valve	9	Fuel pressure warning light
3	Coarse fuel filter element	10	Dual fuel level indicator
4	Fuel strainer	11	Fuel filler cap
5	Electrical fuel pump	12	Firewall
6	Fuel selector/shut-off valve	13	Engine
7	Engine-driven mechanical fuel pump	14	Fuel level probe
15	Fuel distributor on engine side		

Fuel System Schematic

7.13.2 Fuel Tank

Each wing is equipped with an integral fuel tank. The fuel line of each tank is equipped with a removable coarse fuel filter. The fuel filler caps can be locked.

A drain valve is located at the lowest point of each fuel tank. Another drain valve is located at the firewall. All drain valves can be easily operated.
A drainage cup is located on the inside of the baggage compartment door.
Fuel is supplied to the engine by a mechanical fuel pump built into the engine. The mechanical fuel pump has an integrated fuel strainer. When needed, an electrical fuel pump can also be switched on.

The electrical fuel pump is controlled by a switch on the instrument panel labeled **Fuel Pump**. The electrical fuel pump must be turned on during take-off and landing, when low fuel pressure is suspected or during critical phases of flight.

Too low fuel pressure (below 2.2 PSI/0.15 bar) is detected by a pressure probe and a red warning light illuminates in the cockpit. When the fuel pressure is low, the electrical fuel pump must be turned on.

NOTE

When flying near the ground, such as during take-off and landing or when low fuel pressure is indicated, the electrical fuel pump must be turned on

The fuel tanks are vented via a vent line outlet located in the winglets.

7.13.3 Fuel Selector / Shut-Off Valve

The fuel selector is conveniently mounted on the control panel in full view of the pilots.
The red, arrow-shaped selector handle has a LEFT, RIGHT, and OFF-position. Each position is notched and has a self-centering mechanism using a spring-loaded pin. The selector handle points to the chosen position.

In both normal operating positions (LEFT/RIGHT), the fuel supply and corresponding return line of the selected fuel tank are opened. The fuel supply and return line of the other fuel tank are closed.
It is recommended to keep both tanks at approximately the same fuel level.

NOTE

Recommendation: Fuel tanks should be switched at least every 60 minutes.

When the fuel selector valve is in the OFF position, the fuel flow in the supply and return lines is interrupted and functions as a fuel shut-off valve.

To switch the valve into the OFF-position, the knob located at the top of the handle must be PULLED while simultaneously turning the handle clockwise into the OFF-position.

7.13.4 Fuel Level Indication

A floating sensor which is easy to maintain supplied information concerning fuel levels which are then displayed on the fuel indicator. The floating gauge is located above the fuel supply; therefore fuel indication depends on the flight attitude. All filling levels above ¾ will be indicated as FULL due to the dihedral angle.

Additionally, a dipstick to visually verify the fuel level is delivered with the aircraft. With the aircraft horizontal, the dip-stick is inserted straight into the fuel tank so that the handle of the dipstick lays flat with the upper surface of the wing.

After pulling the dipstick out of the fuel tank, the fuel level can be determined by the "wetted" area of the dipstick. This can then be compared with the electrical fuel level indication on the instrument in the cockpit.

The dip-stick must always be carried with the aircraft. It is stowed on the inboard side of the baggage compartment door.

CAUTION

The fuel level indication in the cockpit must be verified with the fuel dipstick daily. For this purpose level the aircraft out as much as possible.

The dipstick has markings showing ½ and ¾ of the maximum fuel tank content.

NOTE

The fuel quantity, fuel used and fuel remaining functions of the G500 are advisory information only and must be verified by the pilot.

7.14 ELECTRICAL SYSTEM

The AT01-100 is equipped with a 12 V direct current (DC) electrical system that is powered by an engine-driven alternator and a battery. When the **ALT1 / BAT** switch is engaged, the electrical equipment can be operated and controlled by rocker switches located on the lower left section of the instrument panel. All electrical circuits are protected by circuit breakers that are accessibly arranged on the right hand section of the instrument panel.

The engine ignition systems are independent of the aircraft power supply system.

7.14.1 Power Supply and Battery System

The 12 V lead-acid battery (capacity depending on type installed) is connected to the electrical system of the aircraft via a 50-amp circuit breaker and the **ALT1 / BAT** switch. With the engine operating, the battery is charged by a 40-amp alternator that is equipped with an internal regulator and protected by the 50-amp alternator (**ALT1**) circuit breaker. The alternator is air-cooled and driven by a V-belt drive geared down from the propeller shaft.

If the alternator regulator fails, the red alternator warning light **ALT1** located in the upper mid-section of the panel will illuminate.
The charging current of the battery and the voltage level is monitored by the ammeter and voltmeter. In an emergency, the battery is able to supply all essential electrical equipment for at least half an hour, provided that the battery is correctly maintained and in a good condition

7.14.2 Ignition System and Starter

The engine is equipped with 2 electronically controlled ignition systems that have two independent ignition circuits. The ignition system is activated by the ignition switch. An internal control unit interrupts the ignition if the propeller speed drops below 100 RPM.

With the ignition key in the R or L position, an ignition circuit is deactivated. In the BOTH position, both ignition circuits are active. When the key is turned to the START position, the starter motor is activated. When the key is released it returns to the BOTH position and the starter is disengaged.
Further information for engine operation and pre-flight checks are contained in the Operator's Manual for all versions of ROTAX® 912 engines.

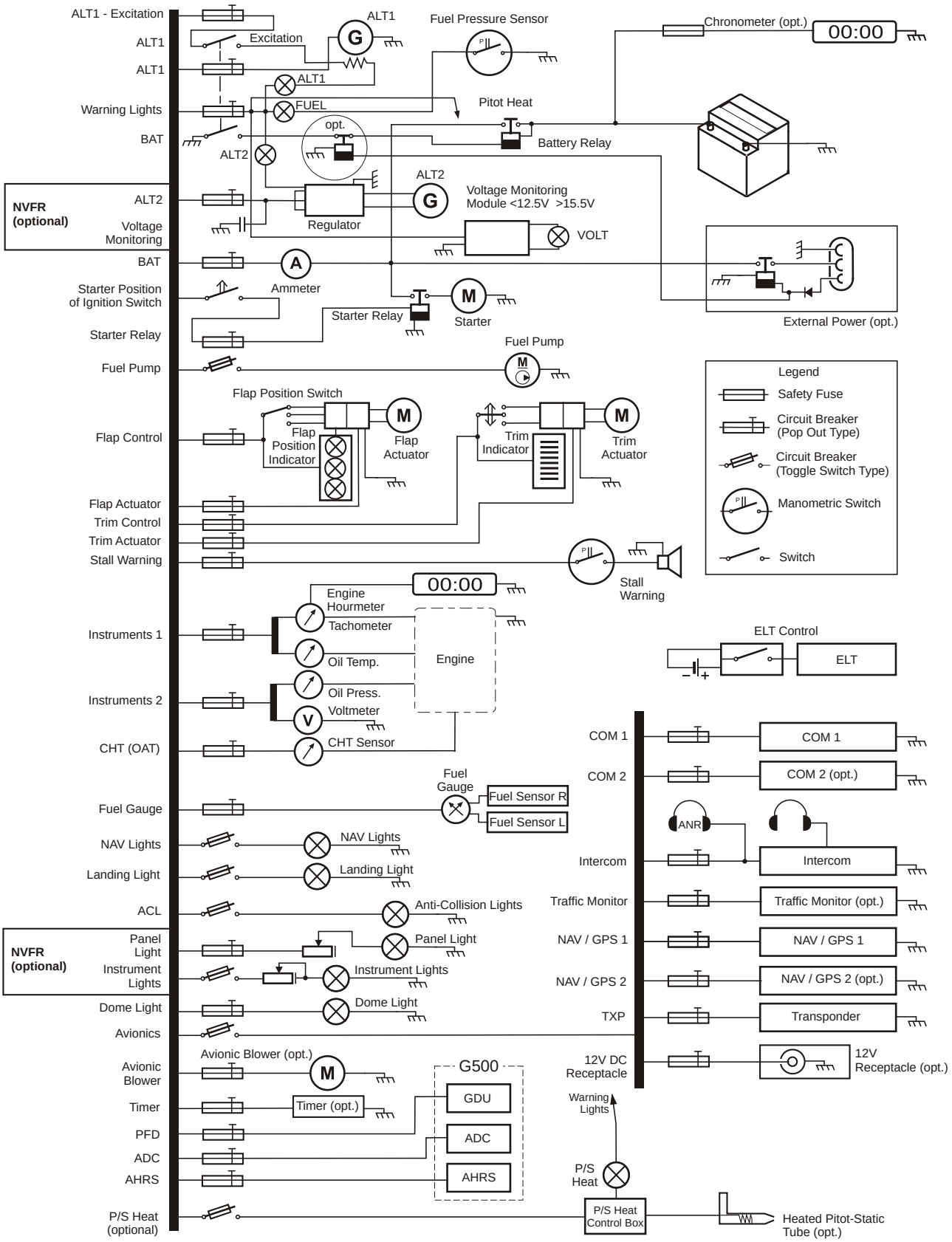

Fig.: Electrical System Schematic

7.14.3 Electrical Equipment and Circuit Breakers

All electrical equipment can be turned on or off by push-pull type circuit breakers or by rocker switches with built-in circuit breaker function.
COM/NAV-equipment along with other avionic equipment is supplied with electrical power through the **Avionics** switch. Additionally, the avionic equipment is protected by separate circuit breakers.
Equipment regularly used in flight (fuel pump, ACL, etc.) are controlled by their own rocker switches with built-in circuit breaker function.

7.14.4 Voltmeter and Amperemeter

The voltmeter shows the system voltage generated by the power sources. The scale on the voltmeter is divided into three different colored voltage ranges:

Red Arc	8-11	Volts
Red-green cross-hatched Arc	11-12	Volts
Green Arc	12-15	Volts
Red Arc	15-16	Volts

The amperemeter shows the current flowing between the battery and the electrical system of the aircraft. When the battery is being charged, the amperemeter is in the (+) range. When the battery is discharging the amperemeter is in the (-) range, which means that the battery is supplying the electrical system of the aircraft. During normal operation, this is a sign of an alternator malfunction.

7.14.5 Warning Light ALT 1

The red alternator warning light **ALT1** should not illuminate during normal operation.
The warning light illuminates only if:

- An alternator failure (**ALT1** produces no current) occurs

In this case the electrical power is supplied solely by the battery.
The ignition system of the engine is independent of the external alternator and is therefore unaffected.

7.14.6 Warning Light FUEL

If the fuel pressure at the fuel distributor ahead of the carburetors drops below 2.2 PSI (0.15 bar), a pressure-controlled switch activates the red warning light **FUEL** located in the upper mid-section of the instrument panel.
Probable causes may be:

- insufficient fuel supply;
- vapor lock in the fuel system.

7.14.7 Engine Instruments

Cylinder head temperature, oil temperature and oil pressure are displayed on analogue instruments located on the right side of the instrument panel.

7.14.8 External Power Unit (optional)

It is recommended to use an External Power Unit (EPU) for engine start-up at outside air temperatures below –10° C. The EPU receptacle is optional and is mounted on the right fuselage side below the battery. Access is provided by a service door in the lower cowling.

Electrical power for the engine starter and the electrical buses is provided by a three poled plug (MIL standard) protected from reverse polarity by a relay circuit. A second relay disconnects the on-board battery as long as the external power source is connected to the aircraft. This second relay prevents an uncontrolled charging or discharging of the battery during the EPU operation.

WARNING

Before starting the engine with external power, make sure that NO persons or objects are in the vicinity of the propeller disk.

Procedure for starting up the engine with an external power source:

- Plug in and switch on the external power
- **ALT1 / BAT** switch ON
- Start-up engine (in accordance with section 4.5.2 "Engine Start-up")
- Disconnect external power source

7.15 PITOT-STATIC SYSTEM

A pitot-static tube is installed on the lower surface of the left wing which, via two separate connections, supplies total pressure and static pressure (from 6 vents distributed on the diameter). Total pressure and static pressure lines travel through the interior of the wing to the wing root where they are connected to water separators. The pressure lines have connections installed at the wing root to simplify disassembly of the wing.

Error in the static system can be neglected for altitude measurement. An airspeed calibration chart is provided in Section 5 of this manual.

NOTE

When the aircraft is parked the pitot static tube should be covered with the supplied pitot tube cover to protect it from dirt and other contamination. The cover is attached to a large "Remove Before Flight" ribbon.

7.15.1 Pitot Heat (optional)

On request, a heated pitot-static tube can be installed. The heater is turned on using the **P/S Heat** switch.

The size and location of the heated pitot static tube are identical to the unheated version. Temperature is controlled automatically.

Function:
The **P/S HEAT** warning light illuminates when:

⇒ **P/S Heat** switch OFF or
⇒ Pitot heat is defective

CAUTION

*This aircraft is **<u>not certified</u>** for flight into icing conditions, even if a heated pitot-static tube is installed.*

*Switch **P/S Heat** OFF when OAT exceeds + 59° F (+15° C).*

7.16 STALL WARNING SYSTEM

The stall warning system causes a loud buzzing sound at least 5 kts before the stall is reached in all flap settings.

As the aircraft approaches a stalled condition, a switch on the wing leading edge is activated due to a change in airflow as the angle-of-attack increases. The switch generates a loud buzzing sound as long as this condition is maintained.

NOTE

The stall warning system (a small metal plate on the leading edge) is delicate and must be handled with care.

7.17 AVIONICS

Depending on the installed optional avionic equipment, a NAV/COM transceiver, a transponder or a multi-functional display may be located in the centre section of the instrument panel. Detailed information on the operation of this equipment and descriptions of their systems are provided in the POH Supplements in Section 9.

The COM transmitter is activated by a push-to-talk button, integrated into each control column. The microphone and headphone jacks are located in the rear section of the centre pedestal between the seats.

Operating instructions for COM/NAV equipment are supplied in Section 9.

[intentionally left blank]

SECTION 8

HANDLING, SERVICE & MAINTENANCE

		Page
8.1	INTRODUCTION	8-2
8.2	AIRCRAFT INSPECTION PERIODS	8-2
8.3	MODIFICATIONS AND REPAIRS	8-2
8.4	GROUND HANDLING	8-3
8.4.1	Towing	8-3
8.4.2	Parking	8-3
8.4.3	Tie-Down	8-4
8.4.4	Jacking	8-4
8.5	CLEANING AND CARE	8-5
8.5.1	Painted Surfaces	8-5
8.5.2	Canopy	8-7
8.5.3	Propeller	8-7
8.5.4	Engine	8-8
8.5.5	Interior Cleaning	8-8

8.1 INTRODUCTION

Section 8 contains factory recommended procedures for correct ground handling as well as information regarding care and servicing of the AQUILA AT01. Furthermore, it includes requirements which must be adhered to during inspection as well as during maintenance and when modifications and repairs are carried out.

8.2 AIRCRAFT INSPECTION PERIODS

The required inspection items are listed and described in the AQUILA AT01 Maintenance Manual (Document number MM-AT01-1020-110), the Operation Manual of the ROTAX® type 912 engine series and the mt-propeller Operation and Installation Manual.

CAUTION

If the engine is operated extensively on AVGAS 100LL (more than 30 hrs within 100 hrs) the interval between oil changes shall be reduced to 50 hrs.

8.3 MODIFICATIONS AND REPAIRS

Changes to the aircraft are only permissible with the approval of the EASA or the appropriate National Aviation Authority to ensure that the airworthiness of the aircraft is not adversely affected.

All maintenance and repair work must be accomplished in accordance with the instructions contained in the current issue of the AQUILA AT01 Maintenance Manual.

Prior to major repairs and in situations where the cause of damage to the aircraft is unknown, the aircraft manufacturer or TC holder should be contacted.

8.4 GROUND HANDLING

8.4.1 Towing

8.4.1.1 Moving forwards

The aircraft can be safely moved and controlled by one person on a smooth and level surface with the tow bar attached to the nose wheel.

CAUTION

The tow bar should always be removed from the aircraft when it is parked.

8.4.1.2 Moving backwards

The aircraft should be pushed backwards using the tow bar. If needed, it is possible to push on the propeller near the blade root. It is also possible to push on the leading edge of the wing near the fuselage.

8.4.1.3 Turning the aircraft on the ground

To turn tightly, push down on the fuselage in front of the vertical stabilizer to raise the nose wheel off the ground. Now the aircraft can be pivoted around the main landing gear.

CAUTION

1) Never push, pull or lift on the horizontal stabilizer or the spinner!
2) Never push or lift the control surfaces and flaps!

8.4.2 Parking

For short-term parking, align the aircraft into the wind, retract the flaps, set the parking brakes and chock the main wheels.

When parking the aircraft outside for longer periods or in unforeseeable weather conditions, the aircraft should be tied down as described in section 8.4.3.

Furthermore, cover the pitot-static tube and the stall warning, close the canopy, use a canopy cover and cap the openings in the cowling. To avoid damage to the aircraft and its control surfaces due to gusts or strong winds, secure the control column by pulling it to the control stop and securing it with the waist belt and tightening the straps.

It is, none the less, always recommended to hanger the aircraft.

CAUTION

Temperatures higher than 50°C in the cockpit may damage avionics and instruments. When parked in the sun, use a canopy cover to keep the cockpit cool.

8.4.3 Tie-Down

The aircraft has three tie-down points; two are located on the lower surface of the wings in the outboard section (fitted with M 8 threads) and the third is located on the lower fin. The tie-down points are marked by red circles.

It is recommended to always carry the eye-bolts delivered with the aircraft and suitable tie-down ropes in the aircraft. The tie-down points should be covered with tape while flying to keep them clean.

8.4.4 Jacking

Two conical jacking points are located on the lower surface of the wing, at the wing root ribs. Both of these jacking points are marked with a red ring. The tail of the aircraft can be supported on the skid plate under the vertical stabilizer. A tail stand may be placed under the skid plate and attached to the tail tie-down point with a fastener.

The nose wheel may be lifted off the ground for maintenance or inspection by weighing the tail down. The weight is best attached at the tail tie-down point.

8.5 CLEANING AND CARE

CAUTION

Any contamination on the surface of the aircraft deteriorates flight performance and handling qualities.

The stall warning (metal plate on the wing leading edge) is sensitive to excessive amounts of water. Care should be taken when washing the wings near the stall warning.

8.5.1 Painted Surfaces

To maintain the excellent flight performance and handling qualities of the AQUILA AT01 the aircraft must be kept clean and free of damage. Therefore it is recommended to regularly clean the aircraft, paying close attention to the leading edges of the wings and stabilizers.

8.5.1.1 Washing

The aircraft should be washed regularly, using plenty of water, a clean sponge and chamois leather. Severe contamination and dirt, especially insects, should be washed off immediately after every flight, as it is more difficult to remove them when dried.

Only use a mild detergent in cases where the dirt proves very hard to remove. Care should be taken because even a mild detergent will gradually wash away the protective wax coating.

Oil or grease can be removed using a cloth moistened with petroleum. Commercially available aircraft cleaning agents may also be used if they are grease-soluble.

8.5.1.2 Preservation

The aircraft exterior surface is protected with a durable and resistant automotive finish. To retain its protective characteristics, minor damages to the paint should be repaired as soon as practical and the exterior surface of the aircraft waxed one to three times per year using a good **silicone-free automotive hard wax**.

CAUTION

Only silicone-free cleaning and polishing agents may be used.

8.5.2 Canopy

Since acrylic glass can be easily scratched, the same principles apply as for cleaning painted surfaces. The canopy should be cleaned using plenty of water, a soft clean sponge and chamois leather.

Special, commercially available, acrylic glass cleaners can be used to tackle stubborn contamination and dirt. **Never use solvents or thinner to clean the canopy glass**.

Minor scratches may be polished using special acrylic glass polishing pastes that are commercially available. Always follow the manufacturer's instruction to ensure the desired results.

The inside of the canopy may be treated in the same way.

8.5.3 Propeller

Refer to current issue of the Operating and Installation Manual, E-124, from mt-propeller.

8.5.4 Engine

Refer to current issue of the Operator's Manual for the ROTAX® 912s series engine.

8.5.5 Interior Cleaning

Dust and dirt in the interior of the aircraft should be removed using a vacuum cleaner. Prior to cleaning, loose objects and foreign objects should be removed or properly stowed.
The floor carpets may be removed for cleaning. They can be cleaned in the same manner as house-hold carpets or they may be professionally cleaned.
Use a lint-free, moist cloth to clean plastic surfaces such as the instrument panel cover.
The instruments may be cleaned with a dry and soft cloth.

SECTION 9

SUPPLEMENTS

		Page
9.1	INTRODUCTION	9-1
9.2	INDEX OF SUPPLEMENTS	9-2

9.1 INTRODUCTION

In this section, all equipment that is optionally installed in your aircraft is described by the POH-Supplements. Each supplement describes a complete modification or a piece of installed equipment. Only the supplements that apply to the configuration of your aircraft must be contained in this section.

Section 9.2 “Index of Supplements” lists all existing approved supplements for the AQUILA AT01. This table may be also used as a directory for this section, adapted to your aircraft.
If modifications requiring an STC have been conducted on your aircraft at a Maintenance Organization other than AQUILA Aviation, it is the owner’s responsibility to ensure that the appropriate supplements are included in this manual and properly recorded in the index of supplements in section 9.2.

9.2 INDEX OF SUPPLEMENTS

Registration:	**S/N: AT01- 100B-**

Supplement No.	Title	Installed
AS-00	Winter Operation	variable
AS-01	Night VFR (AT01-100A)	
AS-02	ASPEN MFD	
AS-03*	ASPEN PFD	
AS-04	FLYMAP	
AS-05	Night VFR (AT01-100B)	
AS-06	Night VFR (AT01-100C)	
AS-07	Garmin SL 40	
AS-08	Garmin GTX 330 / 328	
AS-09*	Garmin GTN 650	
AS-10*	Garmin GMA 350	
AS-11	ELT – Kannad 406	
AS-12	Garrecht TRX 1500	
AS-13	Garrecht TRX 2000	
AS-14	Trig TT22	
AS-15	Garmin SL 30	
AS-16	ADF – KR 87	
AS-17*	Garmin GTR 225/225A/225B	
AS-18*	Garmin GNC 255A/255B	
AS-19	Garmin GMA 340	
AS-20*	Garmin GNS 430W	
AS-21*	Garmin GTX 335 / 345	

NOTE

*For the devices listed above and marked with an *, it is possible to perform a software update. These will be released on our website (**www.aquila-aviation.de**) by an appropriate SI (Service Information).*